Anritsu

MAINTENANCE MANUAL

SELECTIVE LEVEL METER

ML422B/C

CONTENTS (Cont'd)

MAINTENANCE MANUAL

SELECTIVE LEVEL METER

ML422 B/C

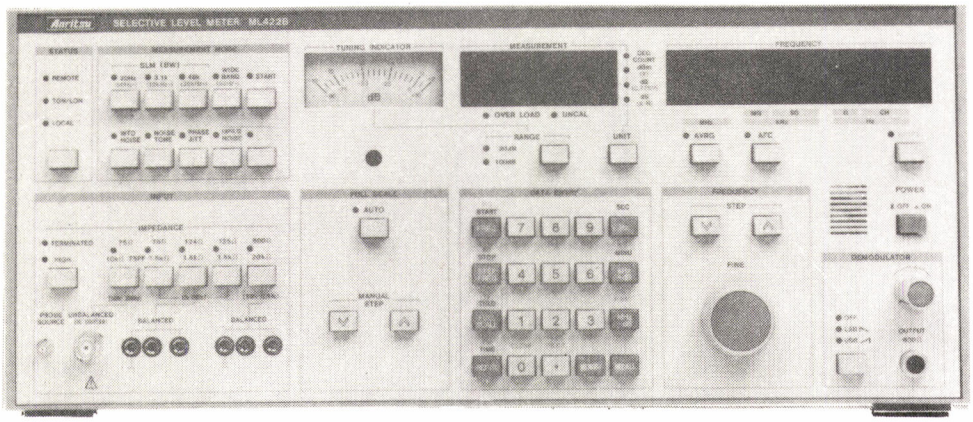

1988.04 x 80 NIV-14(Y)
Printed in Japan

CERTIFICATION

ANRITSU CORPORATION certifies that this instrument has been thoroughly tested and inspected, and found to meet published specifications prior to shipping.
Anritsu further certifies that its calibration measurements are based on the Japanese Electrotechnical Laboratory and Radio Research Laboratory standards.

WARRANTY

All parts of this product are warranted by Anritsu Corporation of Japan against defects in material or workmanship for a period of one year from the date of delivery. In the event of a defect occurring during the warranty period, Anritsu Corporation will repair or replace this product within a reasonable period of time after notification, free-of-charge, provided that: it is returned to Anritsu; has not been misused; has not been damaged by an act of God; and that the user has followed the instructions in the operation manual.

Any unauthorized modification, repair, or attempt to repair, will render this warranty void.

This warranty is effective only for the original purchaser of this product and is not transferable if it is resold.

ALL OTHER EXPRESSED WARRANTIES ARE DISCLAIMED AND ALL IMPLIED WARRANTIES FOR THIS PRODUCT, INCLUDING THE WARRANTIES OF MERCHANTABILITY AND FITNESS FOR A PARTICULAR PURPOSE, ARE LIMITED IN DURATION TO A PERIOD OF ONE YEAR FROM THE DATE OF DELIVERY. IN NO EVENT SHALL ANRITSU CORPORATION BE LIABLE TO THE CUSTOMER FOR ANY DAMAGES, INCLUDING LOST PROFITS, OR OTHER INCIDENTAL OR CONSEQUENTIAL DAMAGES, ARISING OUT OF THE USE OR INABILITY TO USE THIS PRODUCT.

All requests for repair or replacement under this warranty must be made as soon as possible after the defect has been noticed and must be directed to Anritsu Corporation or its representative in your area.

CONTENTS

CONTENTS (Cont'd)

SECTION 1

INTRODUCTION

SECTION 1
INTRODUCTION

This is the Maintenance Manual for the ML422B/C Selective Level Meter. It covers the following information:

SECTION 2, MECHANICAL CONFIGURATION AND BLOCK DIAGRAM:

Describes how the various printed circuit boards (PC boards) are laid out, their electrical operation, and how to change the AC line voltage.

SECTION 3, CALIBRATION AND ADJUSTMENT:

Describes how to perform calibration and adjustment for the local oscillator source and level calibration source.

SECTION 4, TROUBLESHOOTING AND CIRCUITY:

Describes how to troubleshoot and repair the equipment. Schematic diagrams for the equipment are given in this section.

SECTION 5, REPLACEABLE PARTS:

Lists the components found in the schematic diagrams and explains how to order replacement parts.

1.1 Preventive Maintenance

The preventive maintenance usually means cleaning and visual inspection on a regular basis. They will help to improve the reliability of instrument. The method of the preventive maintenance is shown in Table 1-1.

Table 1-1 Preventive Maintenance

Check	Period	Procedure
Outer cover Soiled	Before storing for long period of time.	Wipe away with industrial cleaning solvent.
Dust	When used in dirty locations. When soiling is conspicuous.	Open covers and blow off with compressed air.
Loosen Knobs	When found them.	Tighten any loosen screws with a suitable tool.

SECTION 2

MECHANICAL CONFIGURATION

AND BLOCK DIAGRAM

SECTION 2

MECHANICAL CONFIGURATION AND BLOCK DIAGRAM

2.1 Mechanical Configuration

Figures 2-1 to 2-13 show blow-up diagrams of the ML422 cabinet.

Fig. 2-1	Cabinet Configuration
Fig. 2-2	Front Panel
Fig. 2-3	Local Case
Fig. 2-4	Interior of Local Case
Fig. 2-5	RF Case
Fig. 2-6	Interior of RF Case
Fig. 2-7	Motherboard
Fig. 2-8	CPU, IF1, IF2
Fig. 2-9	CPU Printed Circuit Board
Fig. 2-10	IF1 Printed Circuit Board
Fig. 2-11	IF2 Printed Circuit Board
Fig. 2-12	Rear Panel
Fig. 2-13	First IF BPF

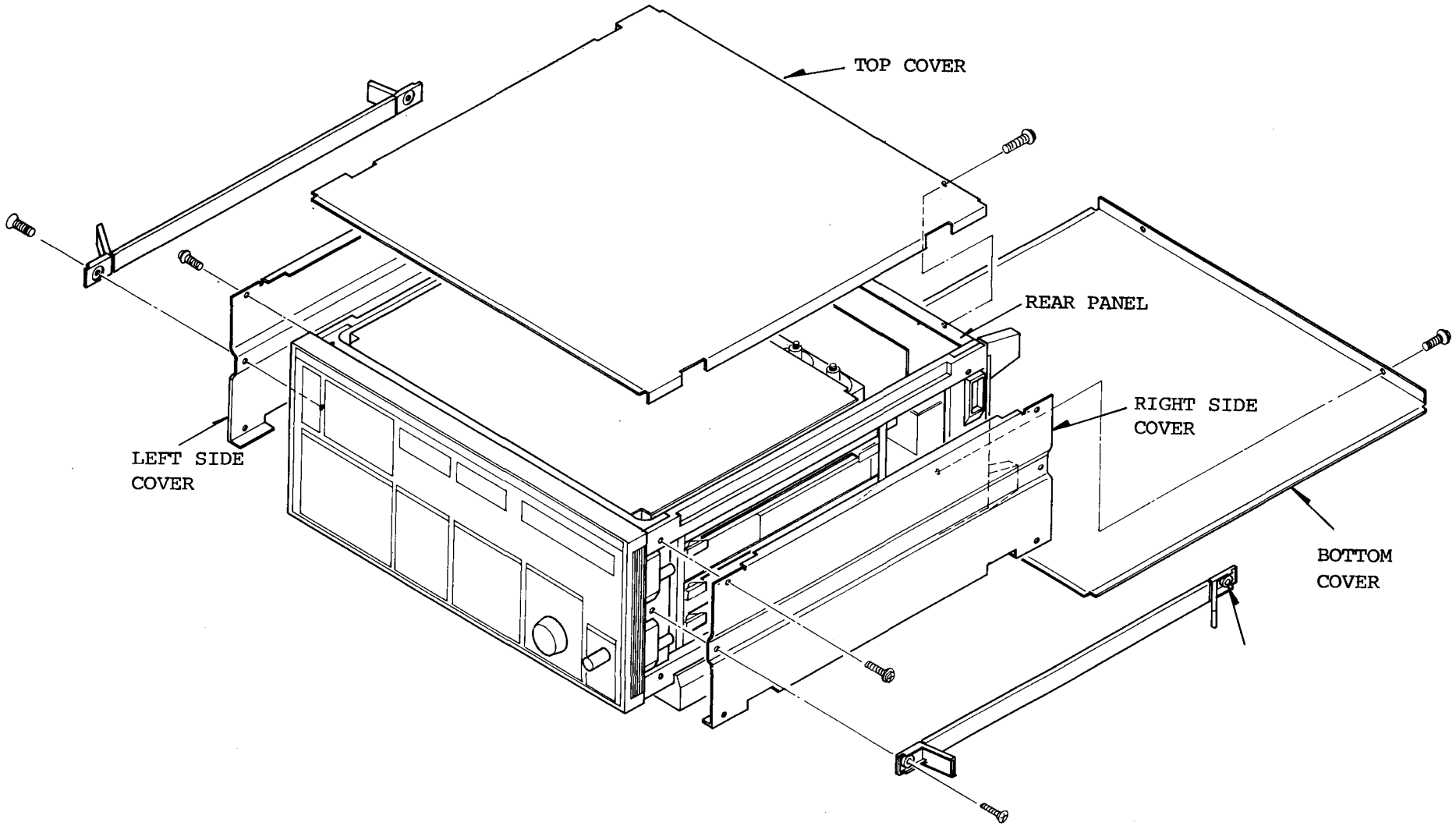

Fig. 2-1 Cabinet Configuration

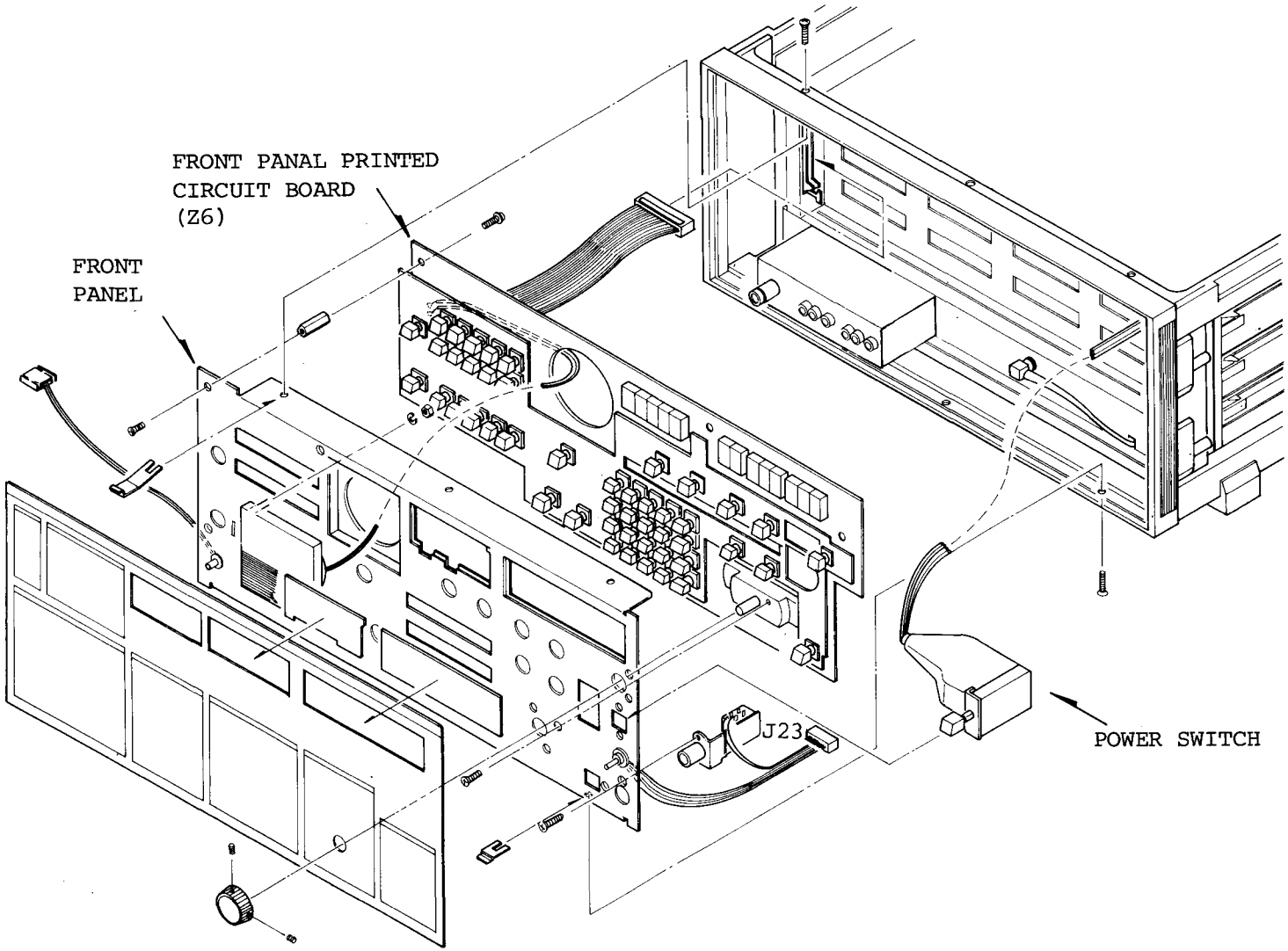

Fig. 2-2 Front Panel

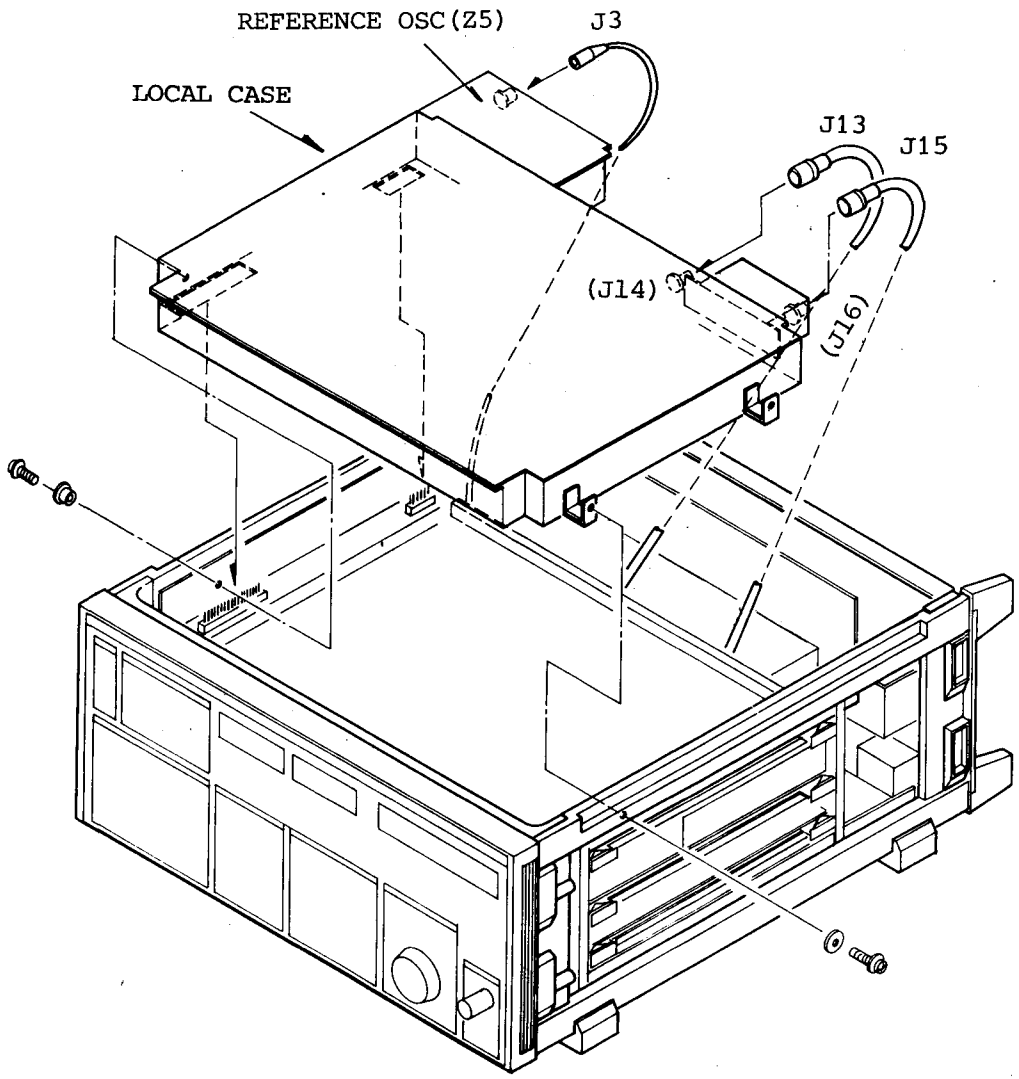

Fig. 2-3 Local Case (Top view)

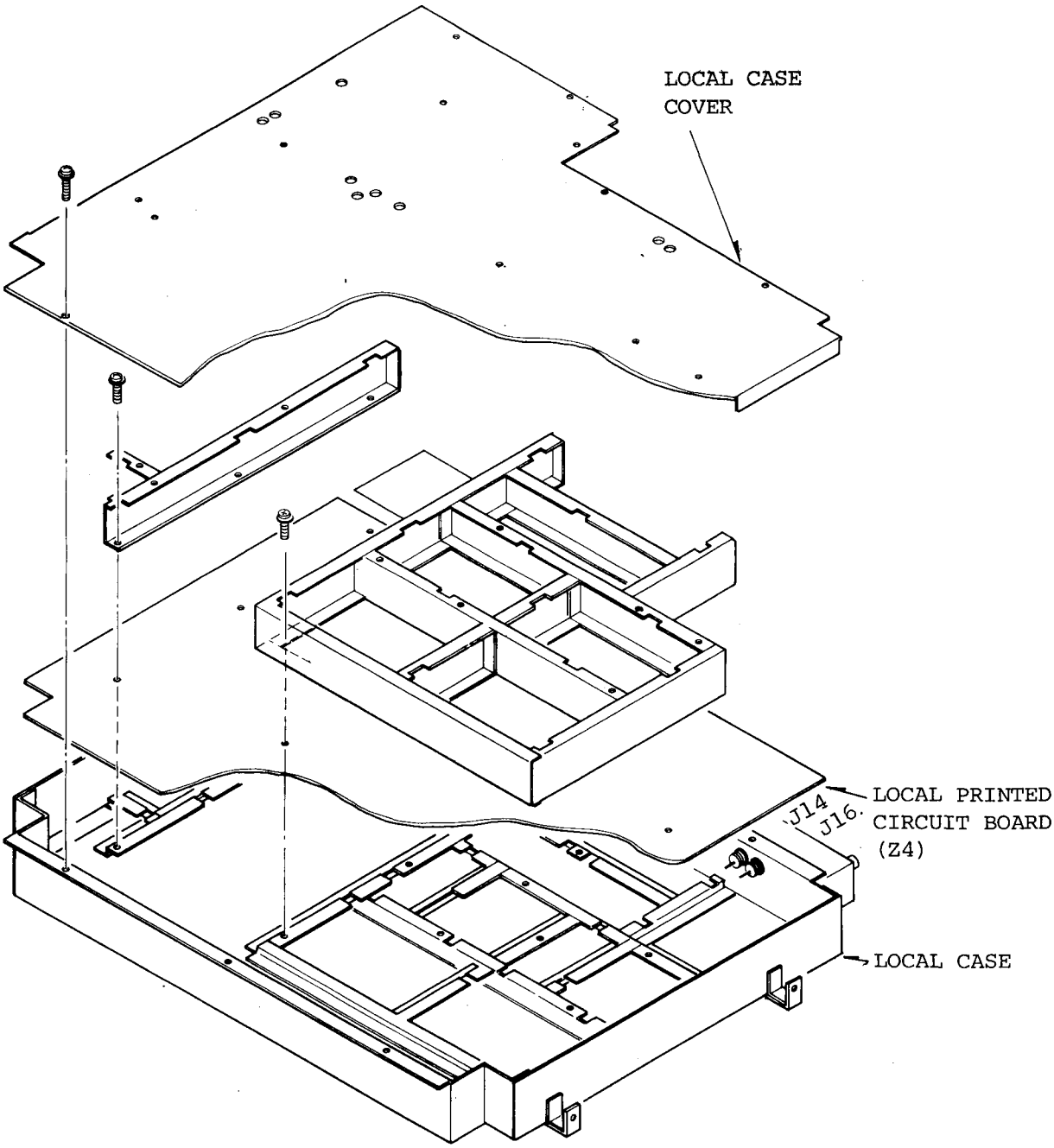

Fig. 2-4 Interier of Local Case

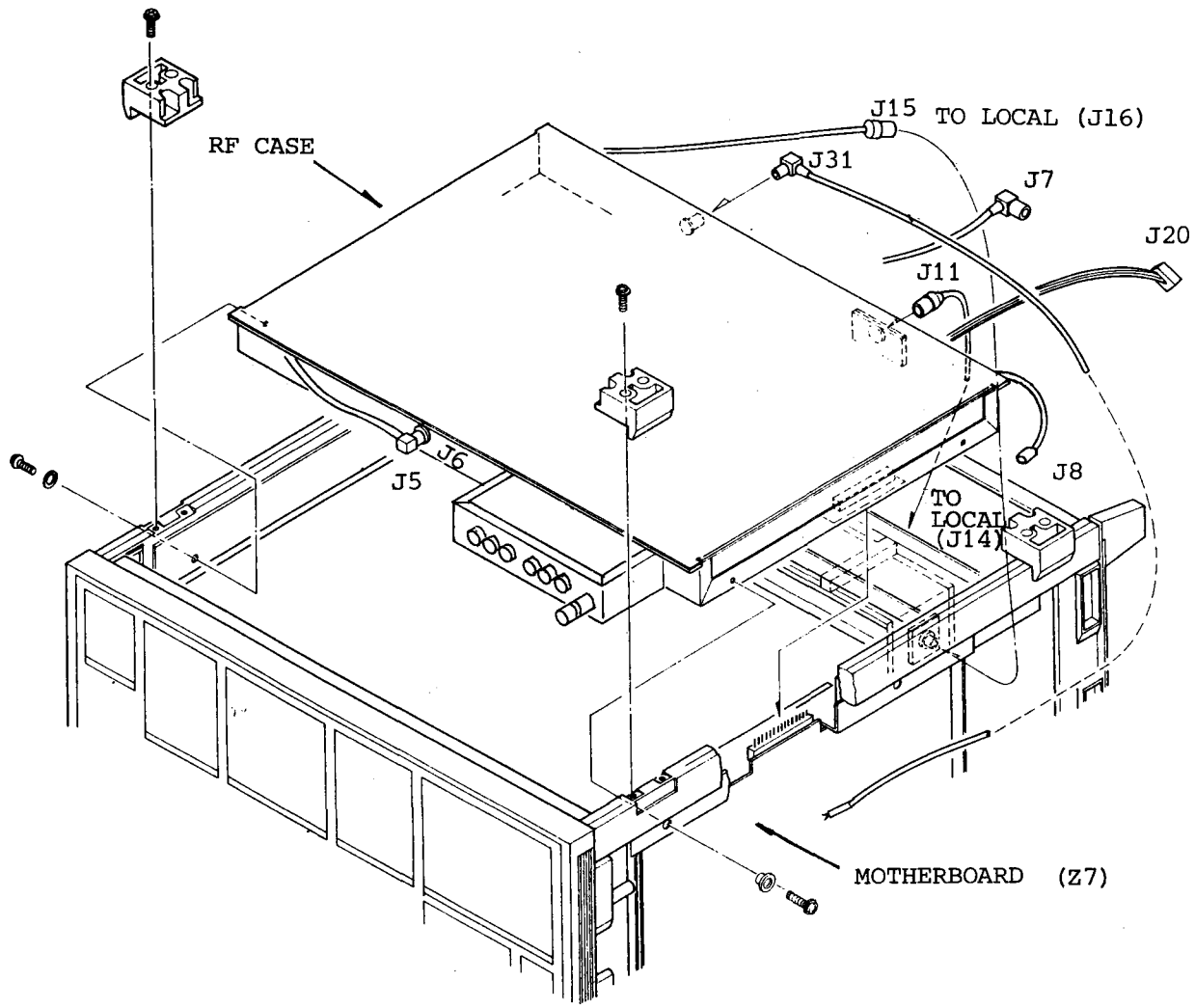

Fig. 2-5 RF Case (Bottom view)

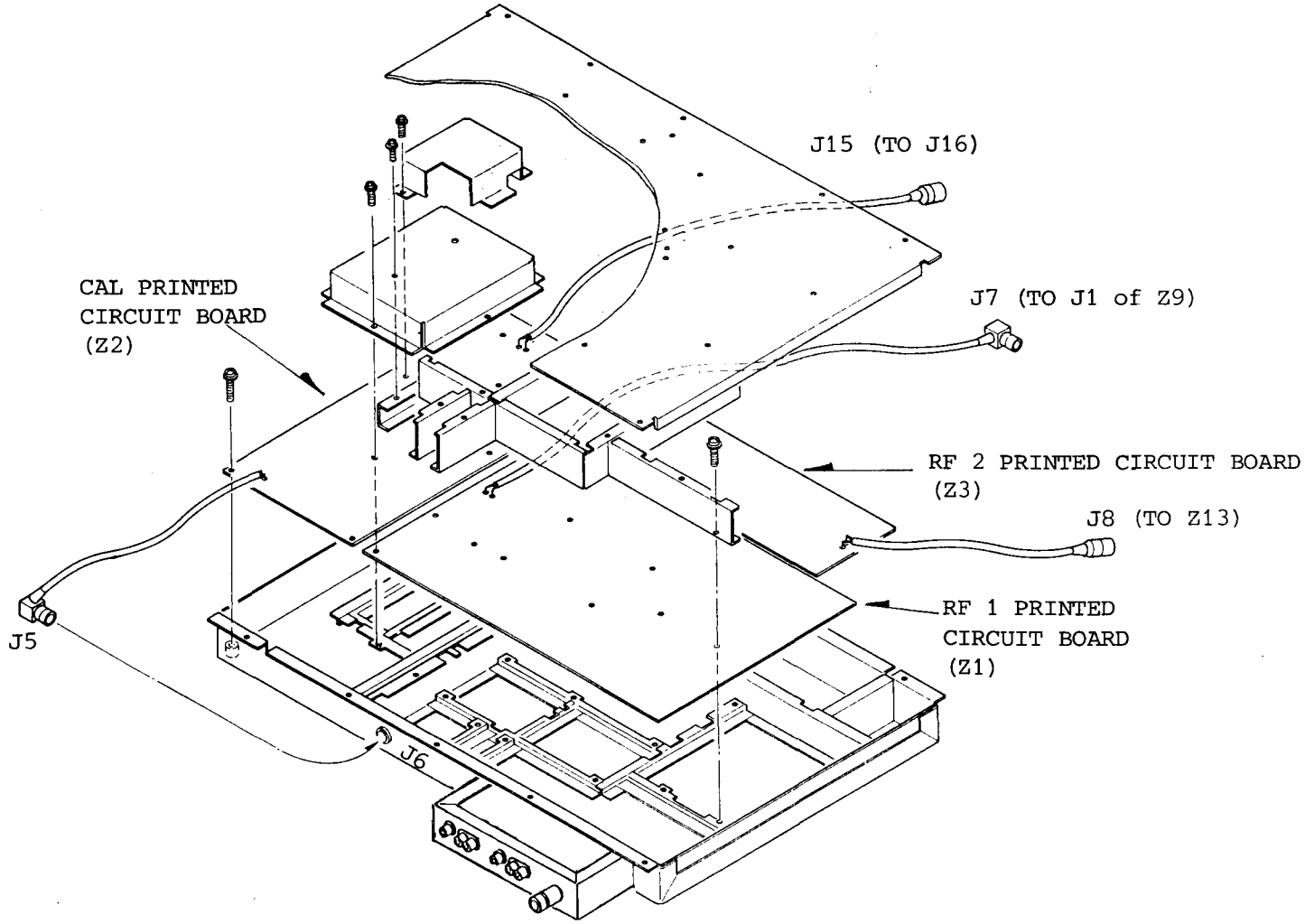

Fig. 2-6 Interier of RF Case

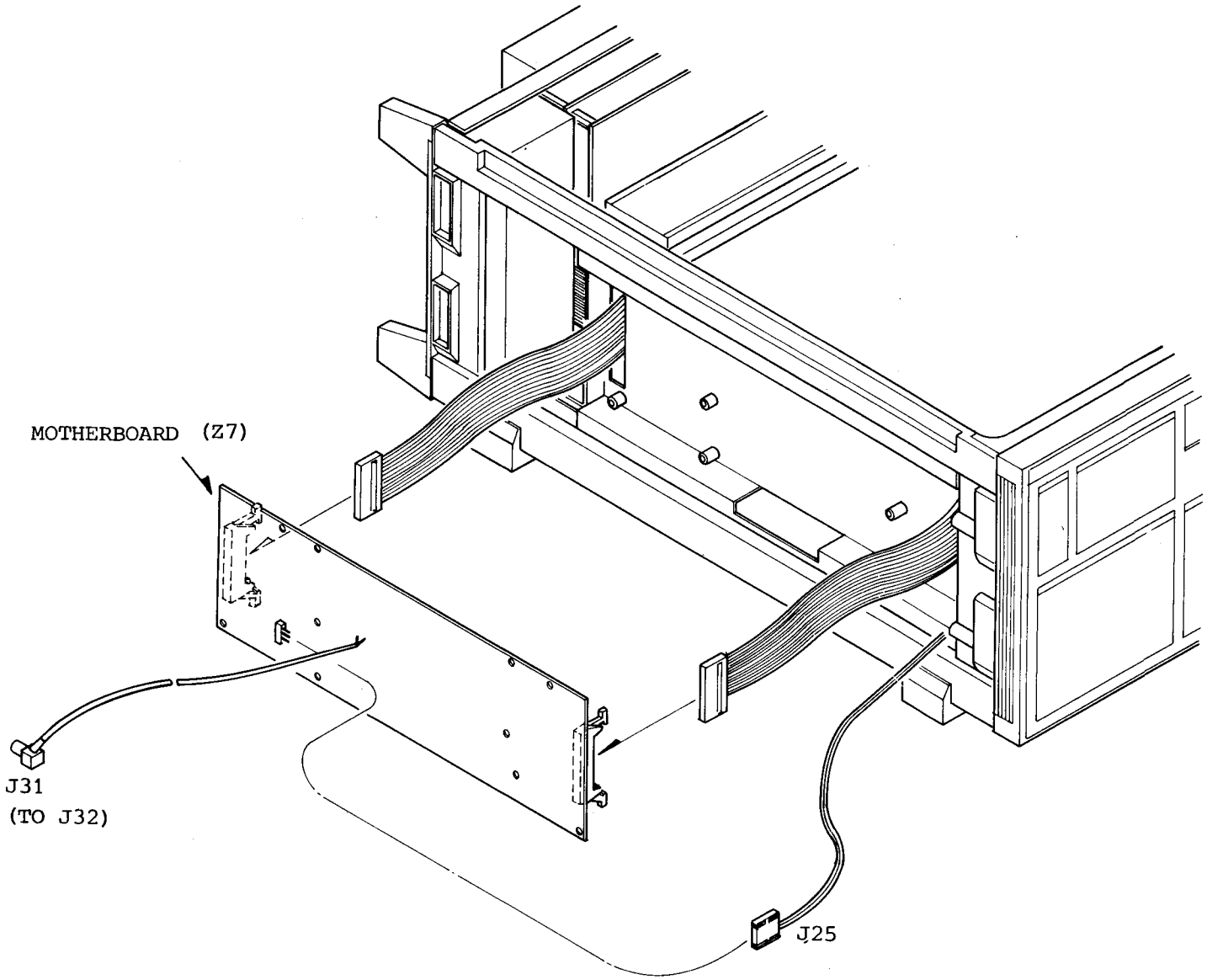

Fig. 2-7 Motherboard (Left side view)

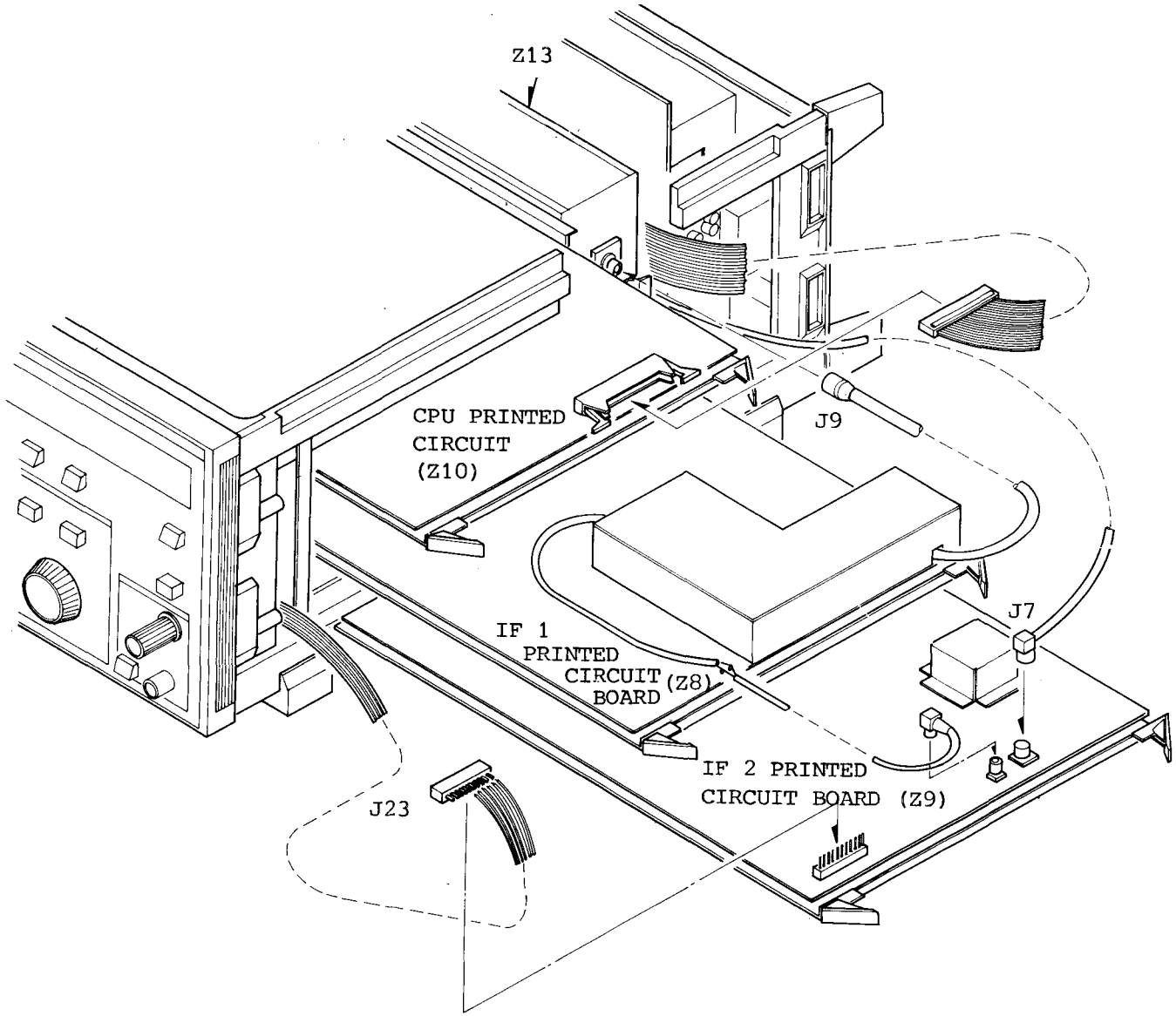

Fig. 2-8 CPU, IF1, IF2 (Right side view)

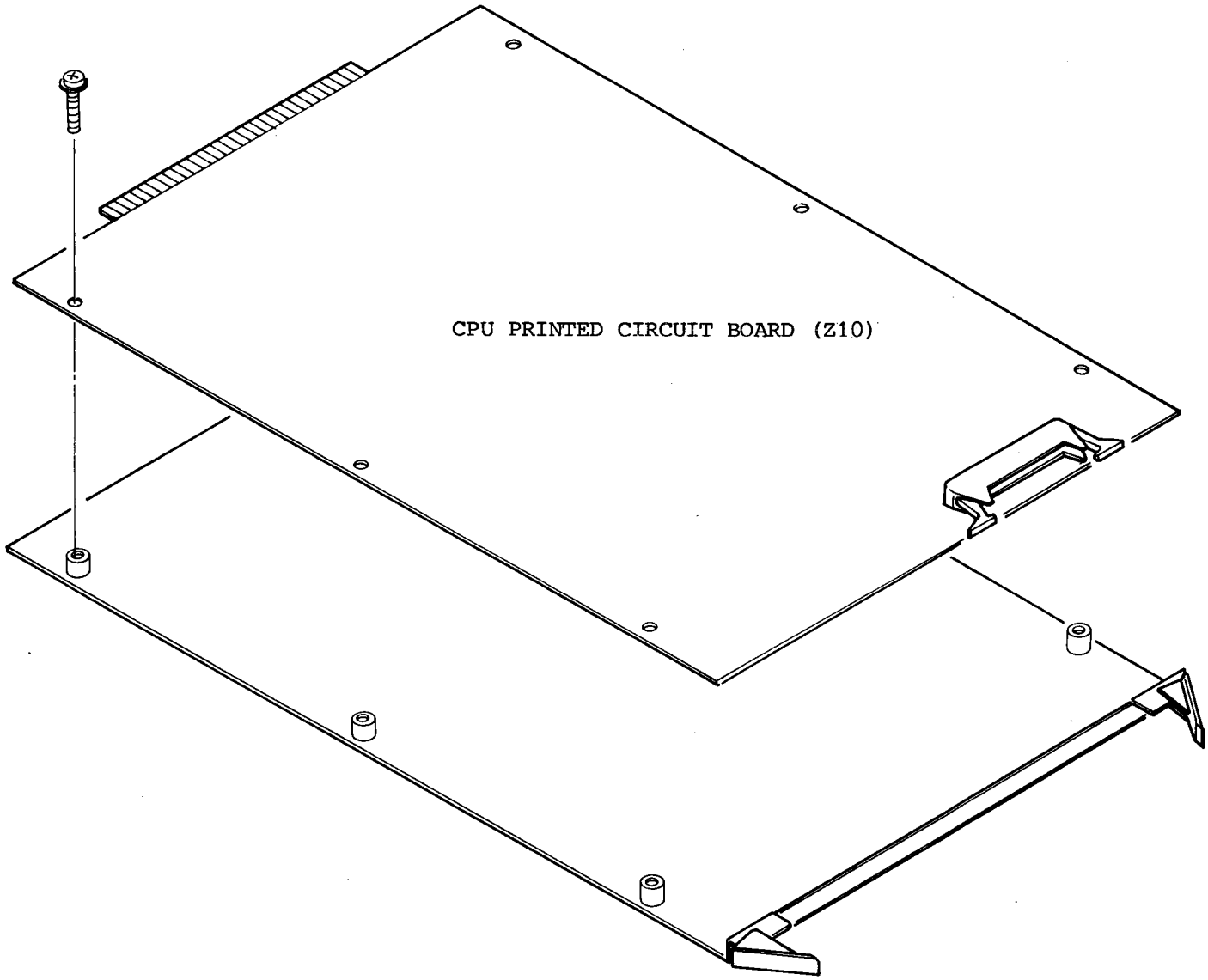

Fig. 2-9 CPU Printed Circuit Board

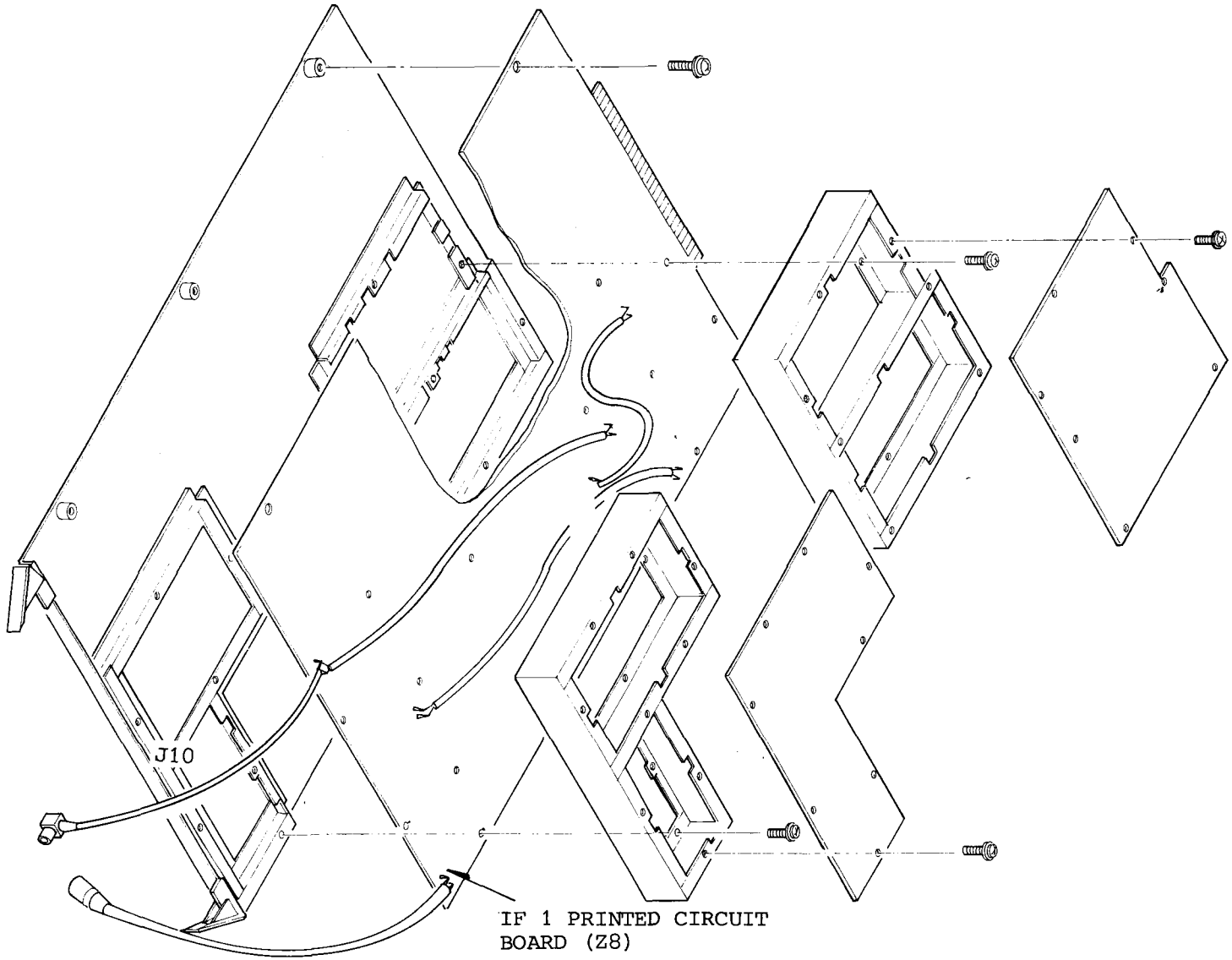

Fig. 2-10 IF1 Printed Circuit Board

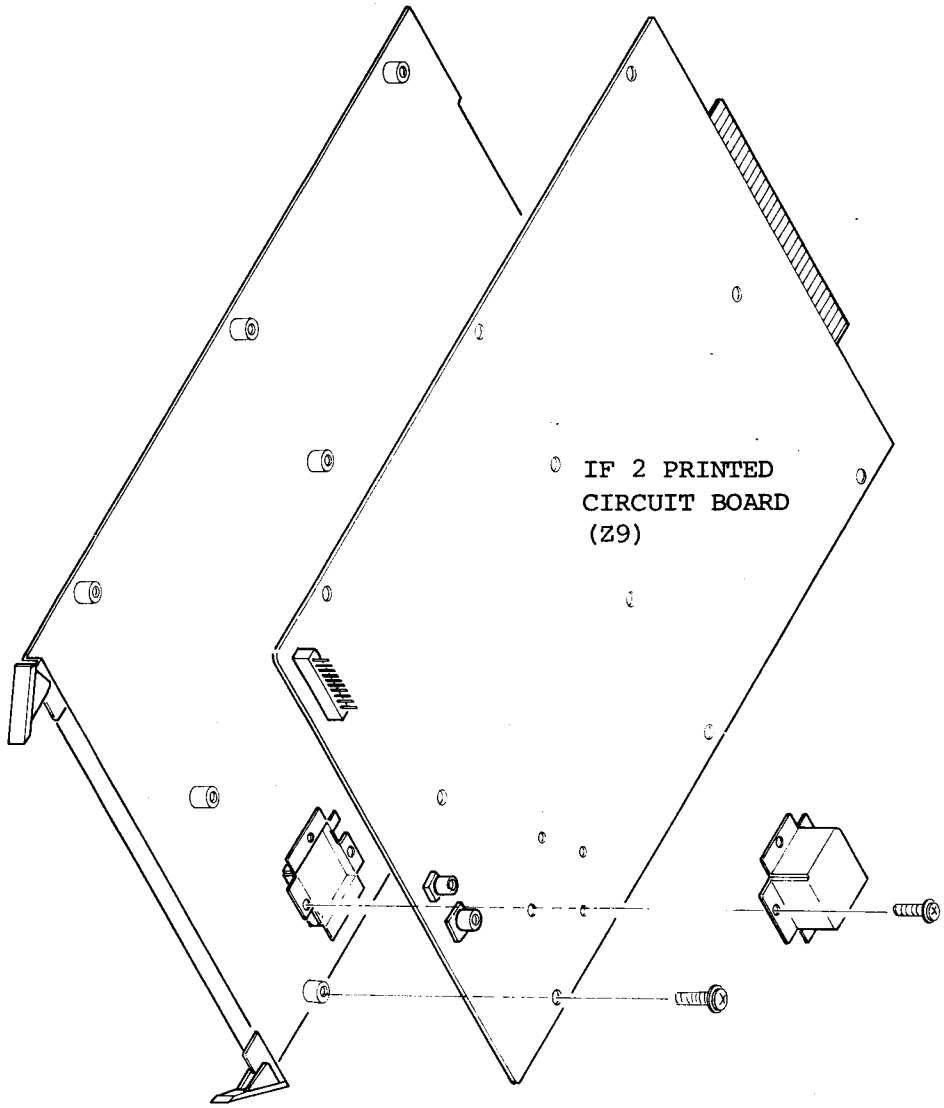

Fig. 2-11 IF2 Printed Circuit Board

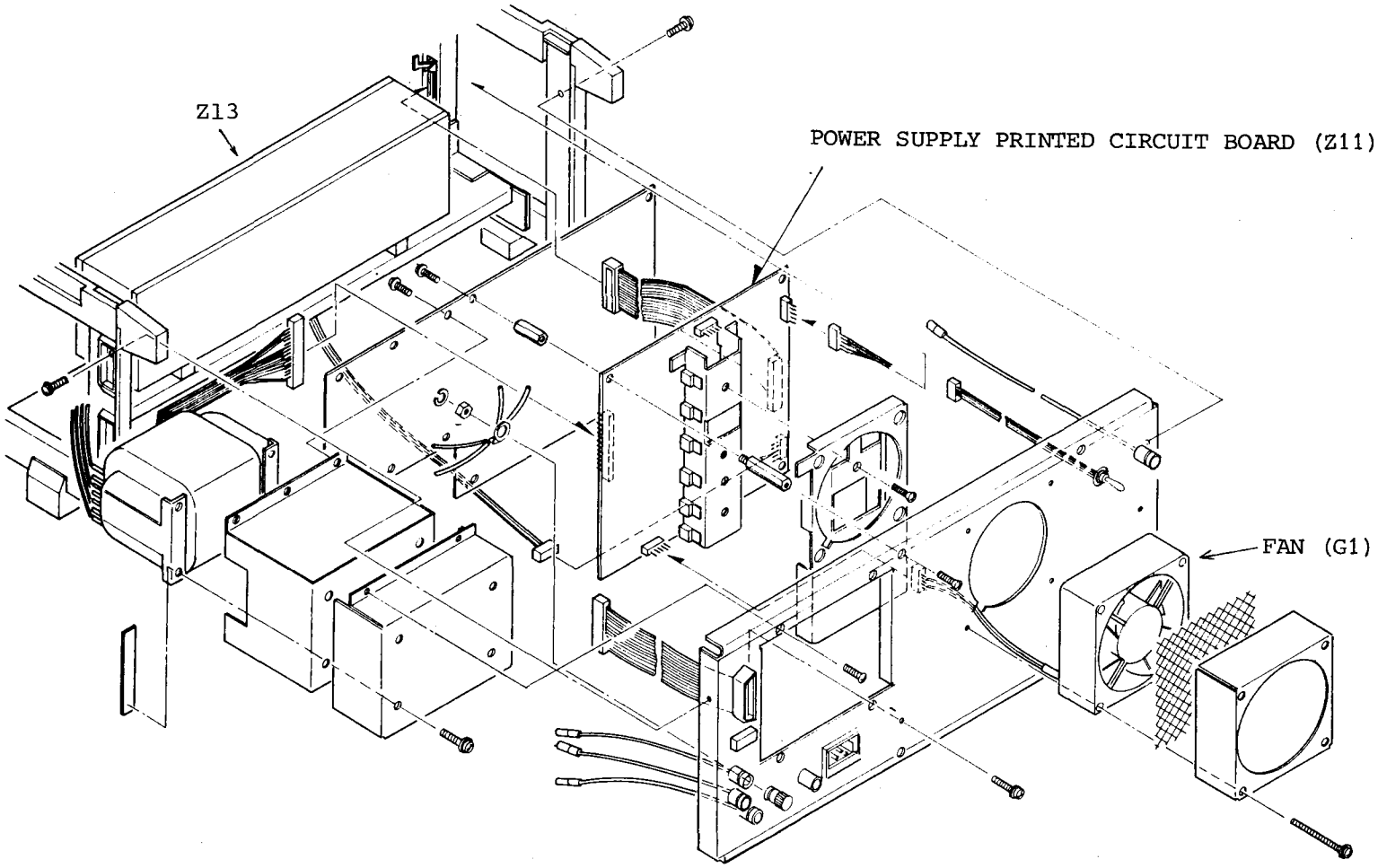

Fig. 2-12 Rear Panel

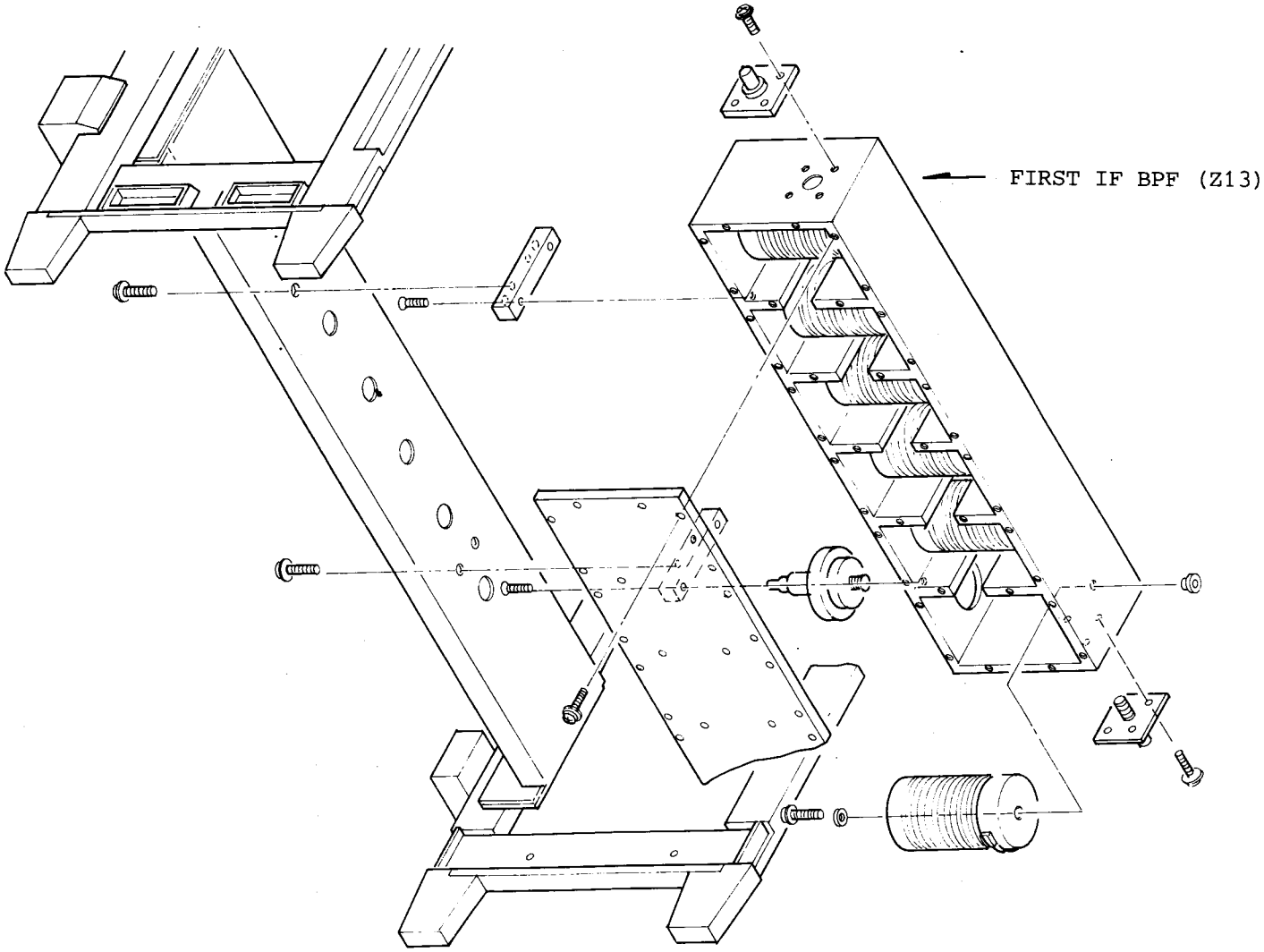

Fig. 2-13 First IF BPF (Rear view)

(1) Removing the top cover

Remove the two screws and take off the top cover. The shield cover shown in Fig. 2-14 can now be seen.

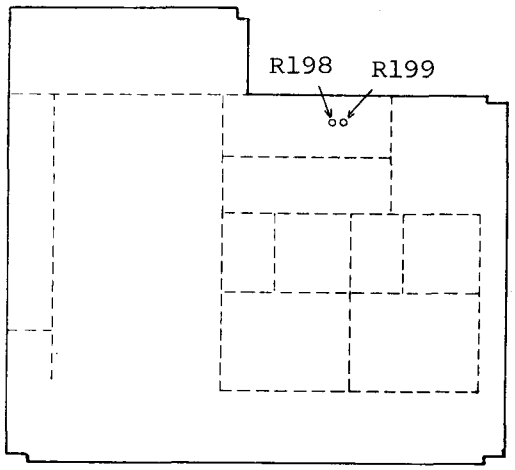

Fig. 2-14 LOCAL Printed Circuit Board (Z4) Shield Cover

This is the shield cover for LOCAL ptinted circuit board Z4. For a detailed description of the LOCAL printed circuit board, see Paragraph 4.4.6.

(2) Removing the front panel

Remove the six screws and pull out the front panel. The ront panel printed circuit board Z6 can now be seen.

(3) Remove the right side panel

Remove the six screws and take off the right side cover. The layers of printed circuit boards can now be seen. The uppermost is CPU printed circuit board Z10. The center one is IF1 printed circuit board Z8.

The lower one is IF2 printed circuit board.

(4) Removing the bottom cover

Remove the two screws, and take off the bottom cover. The shield cover shown in Fig. 2-15 can now be seen.

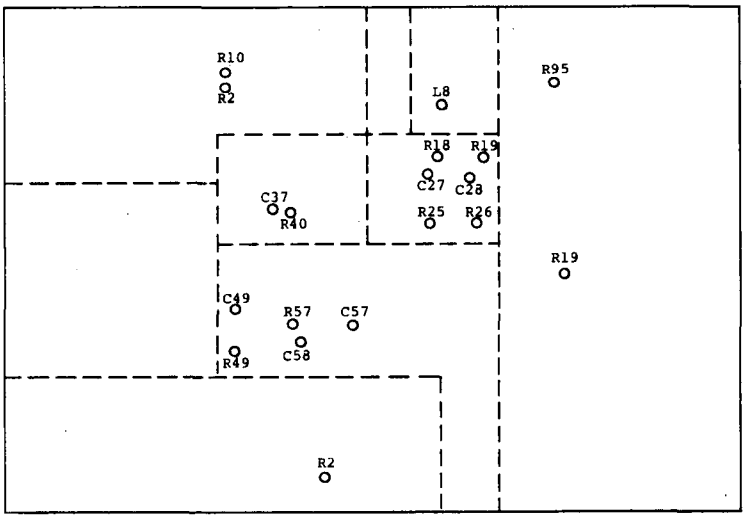

Fig. 2-15 RF/CAL Printed Circuit Board shield cover

This is the shield cover for RF1, RF2 and CAL Printed circuit boards Z1, Z3 and Z2, respectively.

For a detailed description of Printed Circuit boards Z1, Z3 and Z2, see Paragraph 4.4.2.

(5) Removing the rear panel

Remove the six screws and take off the rear panel. The POWER SUPPLY printed circuit board Z11 including the power transformer and REFERENCE OSC Z5 can now be seen.

(6) Removing the left side cover

Remove the six screws and take off the left side panel. The MOTHERBOARD Z7 can now be seen.

6.2 Block Diagram

The Selective Level Meter ML422B/C consists of six major Sections:

1) RF Section
2) IF Section
3) LOCAL Section
4) FRONT PANEL Section
5) CPU Section
6) POWER SUPPLY Section

A simplified block diagram of the ML422B/C is shown in Fig. 2-16.

2.2.1 RF section

An input signal is applied to the 65 dB variable attenuator with high impedance through an input impedance selector.

At the AUTO mode, the signal is automatically controlled at the proper level by this attenuator. The input signal is converted to 56.6 MHz at the first mixer by adding the first local frequency between 56.6 and 86.6 MHz.

In the RF section, the automatic calibration circuit functions in order to measure the input signal accurately.

The calibration signal level is produced by the AGC amplifier, which uses 75Ω, 0 dBm as the reference.

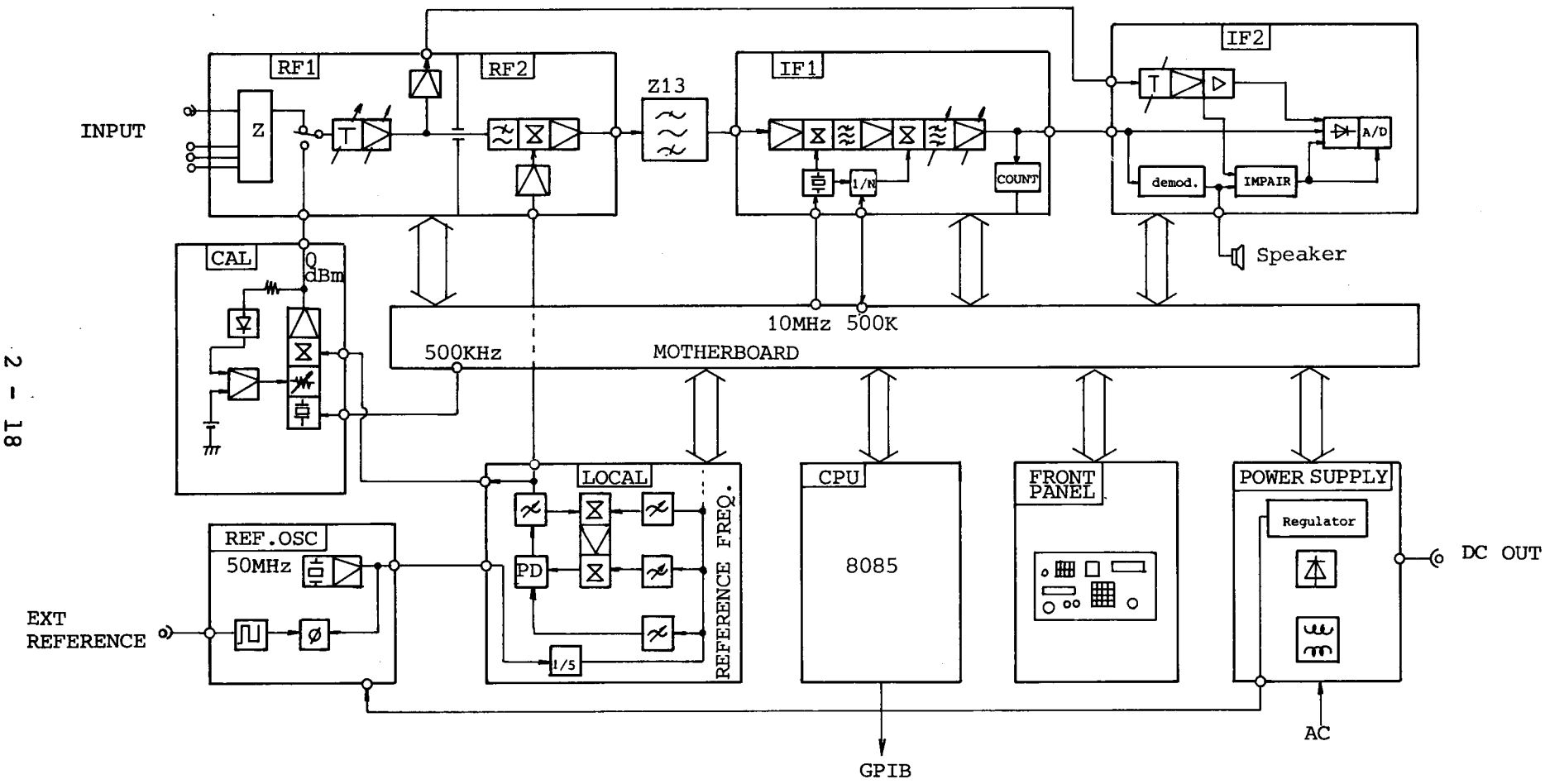

Fig. 2-16 Block Diagram of ML422B/C

2.2.2 IF Section

In the IF section, the 56.6 MHz IF signal is converted to the 600 kHz, second IF signal by using the second local signal of 56 MHz.

The second IF signal proceeds to the band pass filter which has 48 kHz bandwidth and determines the selective bandwidth of the ML422B/C.

The signal is mixed by 560 kHz or 625 kHz and converted to the 40 kHz or 25 kHz, third IF frequency.

560 kHz is obtained by dividing 56 MHz into 1/100, while the 625 kHz is obtained by dividing 5 MHz into 1/8.

The 25 kHz signal is applied to the band pass filter with the bandwidth of 20 Hz and 3.1 kHz.

This 3rd IF signal is detected as an r.m.s value, and the detected signal is converted to the digital value by a 12 bit A/D converter.

There is a 75 dB variable attenuator, variable in 5 dB steps, located in the 3rd IF section which functions to assist the RF section attenuator.

2.2.3 LOCAL Section

This crystal-controlled, synthesized oscillator and functions as the first local oscillator.

This oscillator covers the frequency range from 56.6 to 86.6 MHz in 1 Hz steps, comprising a four-phase Locked Loop Circuit.

In addition, the local section provides a 10 MHz standard signal to the IF section through a tuning filter.

2.2.4 CPU Section

The CPU section provides the control signals to RF, IF, LOCAL and FRONT PANEL sections by means of microprocessors.

In addition, measurement data manipulation can be performed in this section. Interface processing to peripheral devices is also conducted through this CPU section.

2.2.5 FRONT PANEL Section

This section is the interface between the selective level meter and operator.

The operator can control the selective level meter functions through the controls, and read and store the necessary data easily.

2.2.6 POWER SUPPLY Section

The POWER SUPPLY provides the required regulated DC voltages to the circuits in the instruments.

The ac line voltage can be changed to both 100 to 127 V and 200 to 254 V.

2.2.7 Circuit Reference

All printed circuit boards in the ML422B/C have designations beginning with the "Z". Table 2-1 lists the designations for all printed circuit boards of the circuit section. Their location numbers are given in Figs. 2-2 to 2-12, and their schematic numbers in SECTION 4.

Table 2-1 Circuit Reference

Schematic No.	Circuit name	Z designation	Location
1	Overall circuit diagram		
2	RF 1 (1/2)	Z1	Fig. 2-5
3	RF 1 (2/2)		Fig. 2-6
4	RF 2	Z3	Fig. 2-6
5	CAL	Z2	Fig. 2-6
6	IF 1 (1/4)	Z8	Fig. 2-8
7	IF 1 (2/4)		Fig. 2-10
8	IF 1 (3/4)		
9	IF 1 (3/4)		
10	IF 2 (1/7)	Z9	Fig. 2-8
11	IF 2 (2/7)		Fig. 2-11
12	IF 2 (3/7)		
13	IF 2 (4/7)		
14	IF 2 (5/7)		
15	IF 2 (6/7)		
16	IF 2 (7/7)		
17	LOCAL (1/4)	Z4	Fig. 2-3
18	LOCAL (2/4)		Fig. 2-4
19	LOCAL (3/4)		
20	LOCAL (4/4)		
21	REFERENCE OSC	Z5	Fig. 2-3
22	FRONT PANEL (1/3)	Z6	Fig. 2-2
23	FRONT PANEL (2/3)		
24	FRONT PANEL (3/3)		
25	CPU (1/4)	Z10	Fig. 2-8
26	CPU (2/4)		Fig. 2-9
27	CPU (3/4)		
28	CPU (4/4)		
29	POWER SUPPLY	Z11	Fig. 2-12
30	MOTHERBOARD	Z7	Fig. 2-7

SECTION 3

ADJUSTMENTS

SECTION 3
ADJUSTMENTS

3.1 Introduction

This section details the adjustment procedures for each component of the ML422B/C. These adjustments are required if an abnormal condition is detected in the periodic performance check or if an error occurs or a part is replaced.

Usually, the following items must be adjusted:
- Reference frequency
- Level measuring accuracy

These items can be adjusted by removing the top and bottom covers of the ML422B/C.

To adjust other items, an extender board and extender cables, contained in the service kit (optional accessory), are required.

3.2 Items for Adjustment

Table 3-1 shows adjustment items, adjustment locations, and the equipment required. From this Table, it can be determined what should be adjusted if an abnormal condition is detected in the performance check.

Table 3-1 Adjustment

Item	Location	Equipment required	Requirement of performance check
1. Frequency (Reference)	REFERENCE OSC (Z5): R53	Anritsu MG545 [ ] Frequency synthesizer with option 03	Paragraph 5.2 in operation manual
2. Level accuracy (1) absolute level	CAL (Z2): R95	Anritsu ML423A Standard Level meter	Paragraph 5.3 in operation manual
(2) RF ATT (include STEP AMPL)	RF1 (Z1): R18, R25, L10, C27 } -20 dB R19, R26, L11, C28 } -40 dB R40, C37 } +10 dB R49, C49 } -5 dB R57, C58 } +10 dB	Anritsu MS420A Network/Spectrum Analyzer and Standard resistance attenuator	
(3) IF ATT (STEP AMPL)	IF1 (Z8): R56----- 5 dB R54-----15 dB R73----+10 dB R74----+20 dB R75----+30 dB	Standard Resistance Attenuator	

Table 3-1 Adjustment (Cont'd)

Item	Location	Equipment required	Requirement of performance check
2. Level accuracy (cont'd)			Paragraph 5.3 in operation manual
(3) IF ATT (STEP AMPL)	IF1 (Z8): R116---+10 dB R117---+20 dB R118---+30 dB		
(4) Frequency Response	RF1 (Z1): R14, R17, L8, L9 — frequency response for calibration C57 RF2 (Z3): * L1, L2, L3, L4, C3, C7, C11, C15, R10 — 35 MHz low-pass filter * These must be adjusted if the TUNING INDICATOR indication is changed when changing the frequency.	Anritsu MS420A	
(5) Frequency response (BALANCED only)	RF1 (Z1): R10-(75Ω BALANCED) R2-(124Ω BALANCED)	Anritsu MS420A + transformer	
(6) Frequency response (WIDEBAND)	IF2 (Z9): L2	Anritsu MG443B Synthesizer/ Level Generator	
(7) Absolute level (BALANCED only)	IF2 (Z9): R95 75Ω R96 600Ω R97 135Ω (C type 150Ω) R98 124Ω (B type 135Ω)	Anritsu MG443B	

Table 3-1 Adjustment (Cont'd)

Item	Location	Equipment required	Requirement of performance check
2. Level accuracy (cont'd)			Paragraph 5.3 in operation manual
(8) A/D Linearity	IF2 (Z9): R310, R312, R314, R259 — Selective wideband 20dB scale R282, R292, R41 — 100dB scale Wideband	Anritsu MG443B and Standard Resistance Attenuator	
(9) A/D Converter	IF2 (Z9): R300---Sensitivity R304---Offset R298---Reference voltage	Anritsu MG443B and Digital Multimeter	
3. Input impedance			Paragraph 5.4 in operation manual
(1) 75Ω UNBALANCED	RF1 (Z1): R1 L1	Anritsu MS420A with Reflection Bridge	
(2) 600Ω BALANCED	RF1 (Z1): R8 R9		
4. Selectivity			Paragraph 5.5 in operation manual
(1) 20 Hz	IF1 (Z8): R176 R181 R186 R191 R203 R204	Anritsu MS420A	
(2) 3.1 kHz	IF1 (Z8): L19 to L32	Anritsu MS420A	

Table 3-1 Adjustment (Cont'd)

Item	Location	Equipment required	Requirement of performance check
(3) 48 kHz	IF1 (Z8): R28: Flatness L5 to L17 L33 L34 } Flatness L35 R119 R120	Anritsu MS420A	Paragraph 5.5 in operation manual
(4) Local C/N	Local (Z4): R198 R199 } sum loop R133 --- PLL3 R81 --- PLL2	Anritsu MS62 [ ]	
5. Intrinsic distortion	RF1 (Z1): R31 R120 R52 RF2 (Z3): R2	Anritsu MG443B and Anritsu M-238C Low Pass Filter	Paragraph 5.6 in operation manual
6. Phase jitter (1) Frequency response	IF2 (Z9): R125	Anritsu MG443B	Paragraph 5.9 in operation manual
(2) Accuracy	IF2 (Z9): R167 -- Sensitivity R162 -- Offset		
7. Notch filter	IF2 (Z9): R221 R230 } Notch freq. R239 R244 Loss		Paragraph 5.10 in operation manual

Table 3-1 Adjustment (Cont'd)

Item	Location	Equipment required	Requirement of performance check
8. Impulse noise (1) Dead time (2) Threshold	 IF2 (Z9): R278 IF2 (Z9) R346	 Anritsu MG443B Anritsu MG443B	Paragraph 5.11 in operation manual
9. Tone search	IF2 (Z9): R265 } Threshold R273	Anritsu MG443B and Multimeter	Paragraph 5.12 in operation manual
10. Indication of TUNING INDICATOR	IF2 (Z9): R345	Anritsu MG443B	———
11. Demodulator	IF2 (Z9): R76 --- Output level	Anritsu ML424A Level Meter	———
12. Tracking Frequency	CAL (Z2): R19	Anritsu MF57A Frequency Counter	Paragraph 5.13 in operation manual
13. Gain of IF1	IF1 (Z8): R103 Total gain R78 } Level R79 } difference depends on BW	Anritsu ML424A Level Meter	———
14. Input amplifier supply voltage	RF1 (Z1): R115	Digital Multimeter	———
15. 2nd local PLL (frequency)	IF1 (Z8): R167	Anritsu MF57A	
16. IF rejection	IF2 (Z9): L1	Anritsu MG545	Paragraph 5.7 in operation manual

Table 3-1 Adjustment (Cont'd)

Item	Location	Equipment required	Requirement of performance check
17. 1st Local	LOCAL (Z4): R32, R78, R67 } C/N of PLL1 L15, R48 } Oscillation frequency and level R81 --- C/N of PLL2 L24, R92 } Oscillation frequency and level R117 --- Level shift to MCL R4, R266 } Preset voltage (PLL2) R133--- C/N of PLL3 L33, R153 } Oscillation frequency and level R177 --- Level shift to MCL R147 --- Preset voltage (PLL3) L40, R215 } Oscillation frequency and level R262 Limit R198, R199 } C/N of sum loop R263, R290, R289 } Preset voltage (sum loop) L6 --- Reference 10 MHz OUTPUT	Anritsu MF57A and Anritsu, MS62[ ] and Oscilloscope and Digital Multimeter	———
18. External reference frequency	REFERENCE OSC (Z5): R38	Anritsu MF57A	Paragraph 5.14 in operation manual
19. Fine tuning	Front panel (Z6): R17		———

3.3 Adjustment Procedures

3.3.1 Frequency

Setup

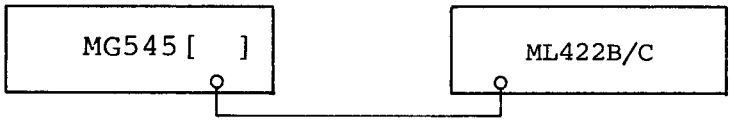

Procedure

1) Set the MG545[ ]as follows:

Frequency	:	30 MHz
Level	:	0 dBm
Impedance	:	75Ω

2) Set the M422B/C as follows:

Frequency	:	30 MHz
BW	:	3.1 kHz or 48 kHz
AFC	:	ON
INPUT	:	75Ω, UNBLANCED, TERMINATED
Full scale	:	0 dBm

3) Adjust R53 of REFERENCE OSC (Z5) so that the FREQUENCY display indicates 30,000,000 Hz.

3.3.2 Level accuracy

Level accuracy can be adjusted by adjusting RF1, (RF2), CAL, IF1 and IF2 circuit. These circuits are associated with the following functions:

- Absolute level shifting (UBBLANCED) : CAL
  (BALANCED) : IF2
- TUNING INDICATOR indication is changed when changing the frequency : RF1

- Low accuracy at specific full scale
  (≧-50 dBm) : RF1 (ATT)
  (<-50 dBm) : IF1 (ATT)
- Linearity: IF2
- The MEASUREMENT display value is correct, but the TUNING INDICATOR value is much incorrect *1.
  (TUNIG INDICATOR display is changed when changing the frequency): RF1, RF2
  (TUNING INDICATOR remains unchanged when changing the frequency): IF2
- TUNIG INDICATOR display is changed when changing the frequency. (only at WIDEBAND) : IF2 *2
- TUNING INDICATOR remains unchanged when changing the frequency) (only at BALANCED): RF1 *2

Check which function is affected, and locate the circuit which should be adjusted for the level accuracy adjustment.

*1 In this case, it can be considered that any of RF1, RF2, and IF2 has a malfunction. Check the level on these circuits as explained in SECTION 4.

*2 See Table 3-1, and adjust by using the same setup as explained in SECTION 5 PERFORMANCE CHECK in Operation Manual.

(1) Absolute level

Setup

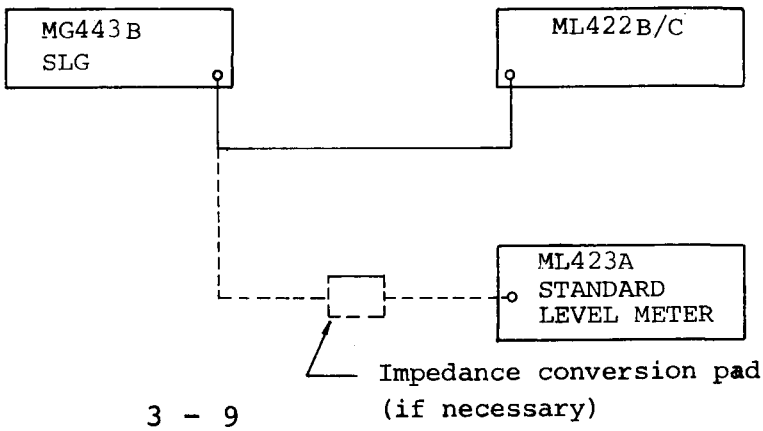

Procedure

1) Set the MG443B as follows:

   Frequency: 100 kHz

   Level : +5 dBm

   Impedance: Same value as that of ML422B/C

2) Perform internal calibration of the ML423A.

3) Set the ML422B/C as follows:

   Frequency : 100 kHz

   Full scale : +5 dBm

   Selective BW: 20 Hz

   Impedance : TERMINATED, 75Ω, UNBALANCED

4) Using the ML423A, calibrate the MG443B output level absolute value to 5.00 dB.

5) Supply the calibrated signal to the ML422B/C , and adjust the R95 of CAL (Z2) so that the measured value is 5.00 dBm. (When the BW 20 Hz key is pressed, ML422B/C internal calibration is performed. Adjust so that the measured value after calibration is 5.00 dB.)

6) Switch the ML422B/C input impedance and repeat the calibration explained in Steps 4) and 5). In this case, the following variable resistors must be adjusted.

Impedance		Adjustment: IF2 (Z9)
BALANCED	75 Ω	R95
BALANCED	124 Ω (135Ω)	R96
BALANCED	150 Ω (135Ω)	R97
BALANCED	600 Ω	R98

(2) Frequency response

Setup

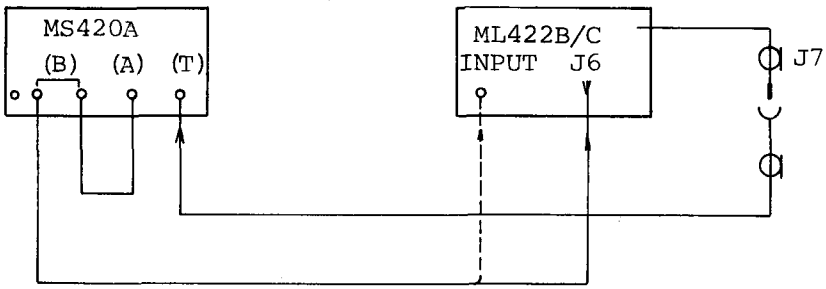

Procedure

1) Set the MS420A as follows:

   Frequency : 10 kHz to 20 MHz

   Output level: -30 dBm

2) Set the ML422B/C as follows:

   Selective BW: 3.1 kHz

   Full scale : -30 dBm

   Impedance : 75Ω, UNBLANCED, TERMINATED

3) Remove J5 from RF1 (Z1) CAL INPUT J6 of the ML422B/C , and connect an extender cable to J6.

4) Remove the cable which connects RF1 (Z1) to IF2 (Z9) in the ML422B/C . Connect J7 to the MS420A INUT (T) through an extender cable.

5) Connect the MS420A OUTPUT (B) to the INPUT connector of the ML422B/C , measure the frequency response, and store the result, as the S data, into the memory of the MS420A.

6) Connect the MS420A OUTPUT (B) to ML422B/C RF1 (Z1) J6 through an extender cable, and measure the frequency response (this result is treated as X data). Adjust R14, R17, L8, and L9 of RF1 (Z1) so that the X-S value becomes flat.

(3) Frequency response (RF ATT)

Setup

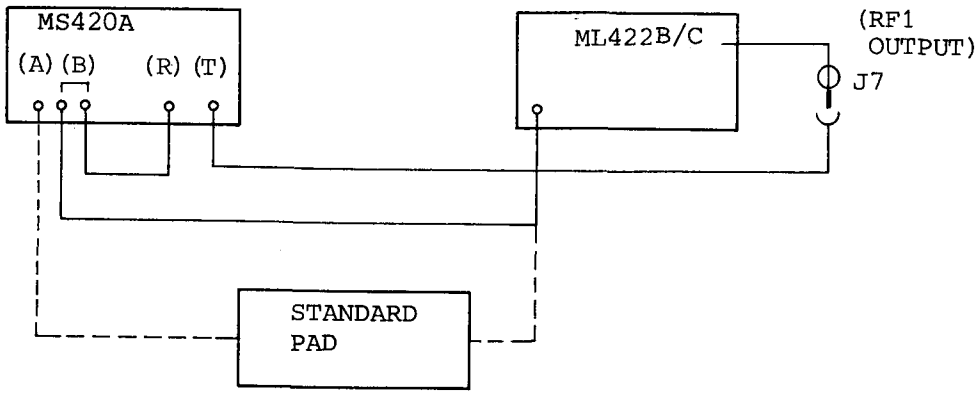

Procedure

1) Set the MS420A (NWA) as follows:
   Frequency: 10 kHz to 30 kHz

2) Set the ML422B/C as follows:
   Frequency: 10 kHz
   Selective BW: 3.1 kHz
   Full scale AUTO: OFF
   Impedance: 75Ω, UNBLANCED, TERMINATED

3) Remove the cable (J7) which connects RF1 (Z1) to IF2 (Z9) in the ML422B/C . Connect J7 to the MS420A INPUT (T) through an extender cable.

4) Adjust the absolute value of attenuation by using the standard pad at the 10 kHz. (±0.01 dB)

Adjust the frequency response by sweeping the NWA. (±0.02 dB)

Adjustment of 0/20/40 dB RF ATT

Full scale (ML422B/C)	0/20/40 dB RF ATT		
	Attenuation	Adjustment: RF1 (Z1)	
		10 kHz	1 MHz ∿ 30 MHz
+10 dBm	40 dB	R26	R19, L11, C28
-10 dBm	20 dB	R25	R18, L10, C27
-30 dBm	0 dB	Reference	

Adjustment of 0/10 dB RF STEP AMPL. 1

Full scale (ML422B/C)	0/10 dB RF STEP AMPL 1		
	GAIN	Adjustment: RF1 (Z1)	
		10 kHz	1 MHz to 30 MHz
-10 dBm	0 dB	Reference	
-20 dBm	+10 dB	R40	C37, (L17, R41)

Adjustment of 0/5 dB RF ATT

Full scale (ML422B/C)	0/5 dB RFATT		
	Attenuation	Adjustment: RF 1 (Z1)	
		10 kHz	1 MHz to 30 MHz
-15 dBm	5 dB	R49	C49
-20 dBm	0 dB	Reference	

Adjustment of 0/10 dB RF STEP AMPL 2

Full scale (ML422B/C)	0/10 dB RF STEP AMPL 2		
	GAIN	Adjustment: RF1 (Z1)	
		10 kHz	1 MHz to 30 MHz
-40 dBm	0 dB	Reference	
-50 dBm	+10 dB	R57	C58 (L18, R58, R59)

5) Adjust C57 of RF1 (Z1) so that the frequency response of ML422B/C RF1 is within ±0.1 dB.

(4) IF ATT

Setup

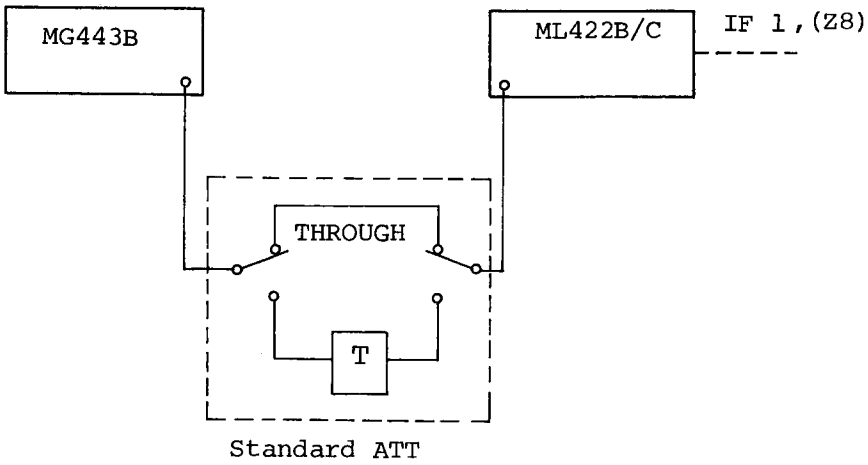

Procedure

1) Set the MG443B as follows:
   Frequency: 10 kHz
   Impedance: 75Ω UNBALANCED
   Output level: -15 dBm or -30 dBm

2) Connect the No. 6 pin (TEST) of Q99 on IF2 (Z9) of ML422B/C to GND. After this connection, IF ATT (STEP AMPL) can be controlled directly from the ten-key pad (keys "." and "0" through "9").

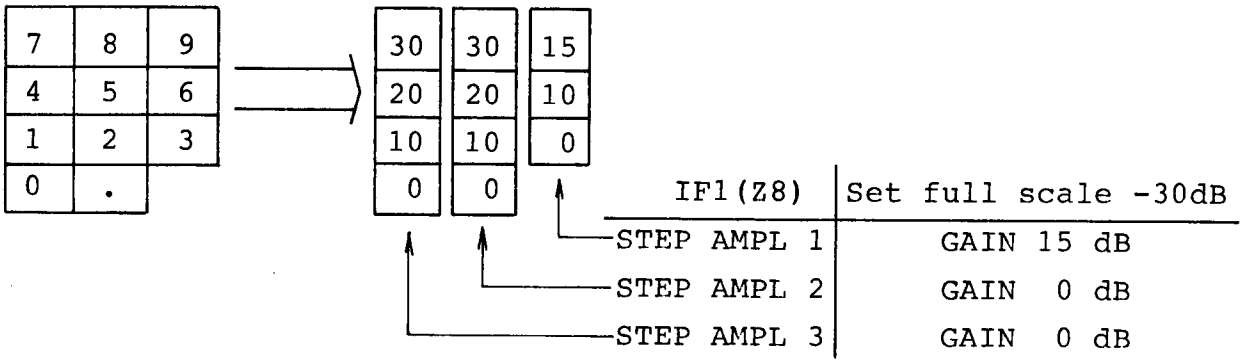

3) Set the ML422B/C as follows:
   Frequency: 10 kHz
   Impedance: 75Ω, UNBALANCED, TERMINATED
   Selective BW: 20 Hz
   Full scale: -30 dBm

4) Switch the standard ATT and at the same time, switch the STEP AMPL gain by using the ten-key pad, and adjust STEP AMPL 1 through 3 so that the MEASUREMENT display displays the same value is standard ATT. Before adjusting each STEP AMPL, always set the following:

[FULL SCALE] [3] [0] [-dB]

STEP AMPL 1

MG443B OUT-put level	Standard ATT	STEP AMPL Gain	Adjustment IF1 (Z8)
-15 dBm	15 dB	15 dB [9]	Reference
	10 dB	10 dB [6]	R56
	0 dB	0 dB [3]	R54

STEP AMPL 2

MG443B out-put level	Standard ATT	STEP AMPL Gain	Adjustment IF1 (Z8)
-30 dBm	0 dB	0 dB [.]	Reference
	10 dB	10 dB [2]	R73
	20 dB	20 dB [5]	R74
	30 dB	30 dB [8]	R75

STEP AMPL 3

MG443B Output level	Standard ATT	STEP AMPL Gain	Adjustment IF1 (Z8)
-30 dBm	0 dB	0 dB [0]	Reference
	10 dB	10 dB [1]	R116
	-20 dB	20 dB [4]	R117
	30 dB	30 dB [7]	R118

5) Release the test connection made in Step 2), and set the original connection.

(5) A/D linearity

Setup

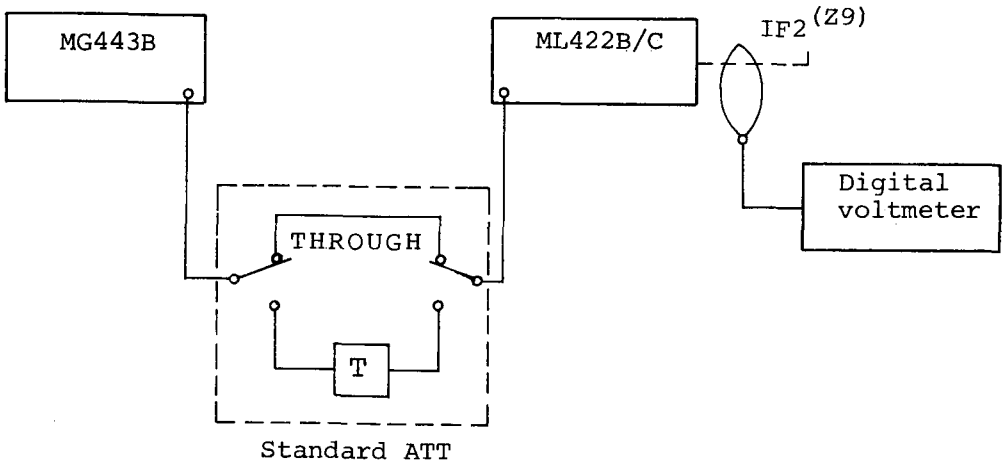

Procedure

1) Set the MG443B as follows:

Frequency: 10 kHz

Impedance: 75 Ω, UNBLANCED

Output level: 0 dBm

2) Connect the No. 6 pin (TEST) of Q99 on IF2 (Z9) of ML422B/C to GND. After this connection, internal calibration is not performed.

3) Set the ML422B/C as follows:

   Frequency: 10 kHz

   Selective BW: 20 Hz

   Impedance: 75 Ω, UNBALANCED, TERMINATED

   Full scale: 0dBm

   Scale range: 20 dB

4) Set the standard ATT to the THROUGH position.

5) Adjust the MG443B output level so that the output voltage at the No. 14 pin of Q87 on IF2 (Z9) is 1.800 V.

6) Adjust R298 of IF2 (Z9) so that the MEASUREMENT display displays 0.00 dB.

7) Adjust the MG443B output level so that the output voltage at the No. 14 pin of Q87 on IF2 (Z9) is 0.100 V. (-17 dBm)

8) Adjust R304 of IF2 (Z9) so that the MEASUREMENT display displays -17.00 dB.

9) Adjust the MG443B output level so that the output voltage at the No. 14 pin of Q87 on IF2 (Z9) is 1.997 V.

10) Adjust R300 of IF2 (Z9) so that the measurement display indicates +1.97 dB.

11) Repeat Steps 5) through 10).

12) Set the MG443B output level to 0 dBm, and set the standard ATT to the THROUGH position. Let the MEASUREMENT display value be S dBm.

13) Set the standard ATT to 10 dB. Let the MEASUREMENT display value in this case be X dBm.

14) Adjust R310 of IF2 (Z9) so that X-S is -10.00 dB. If this value cannot be obtained, adjust both R310 and R285.

15) Repeat Steps 12) through 14).

16) Set the standard ATT to the THROUGH position.

17) Adjust R259 of IF2 (Z9) so that the MEASUREMENT display displays 0.00 dBm.

18) Set the SCALE RANGE of the ML422B/C to 100 dB.

19) Let the MEASUREMENT display value (displayed when the standard ATT is set to THROUGH position S dBm.

20) Let the MEASUREMENT display value (displayed when the standard ATT is set to 50 dB) be X dBm.

21) Adjust R292 of IF2 (Z9) so that X-S is -50.0 dB.

22) Repeat Steps 19) through 21).

23) Adjust R282 of IF2 (Z9) so that the MEASUREMENT display displays 0.0 dBm when the standard ATT is set to the THROUGH position.

24) Set the ML422B/C to WIDEBAND and SCALE RANGE 20 dB.

25) Perform the same procedure as in Steps 12) and 13).

26) Adjust R312 of IF2 (Z9) so that X-S is -15.00 dB.

27) Repeat Steps 25) and 26).

28) Adjust R314 of IF2 (Z9) so that the MEASUREMENT display displays 0.00 dB when the standard ATT is set to the THROUGH position.

29) Set the SCALE RANGE of the ML422B/C to 100 dB.

30) Adjust R41 of IF2 (Z9) so that the MEASUREMENT display indicates -40.0 dBm when the standard ATT is set to 40 dB.

31) Repeat steps 26) to 30)

32) Release the test connection made in Step 2) and set the original connection.

3.3.3 Input Impedance

Setup

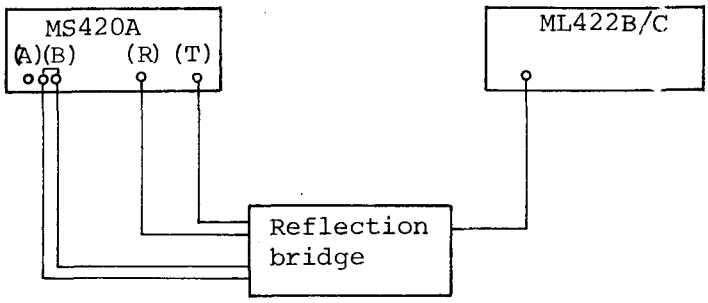

Procedure

1) Set the MS420A as follows:
   Frequency: 10 kHz to 30 MHz
   Output level: 0 dBm

2) Set the ML422 B/C as follows:
   Frequency scale: 0 dBm
   Impedance: 75Ω, UNBALANCED, TERMINATED

3) Adjust L1 and R1 of RF1 (Z1) so that the return loss satisfies the specifications (see Table 2-2 in Operation Manual).

4) Switching the ML422B/C FULL SCALE to -10 dBm and then -30 dBm, check whether or not the specifications are satisfied.

3.3.4 Selectivity

(1) 56.6 MHz, first IF BPF

Procedure

1) Disconnect the cable (J8, J9) connected to 56.6 MHz first IF BPF (Z13), and connect the BPF to the Network Analyzer ME537J with an extender cable.

2) Adjust 7 adjusters so that the loss at center frequency 56.6 MHz is approx. 10 dB.

3) Adjust the adjusters 3 of center so that the flat frequency response (within ±0.01 dB) are obtained at 56.6 MHz ± 40 kHz.

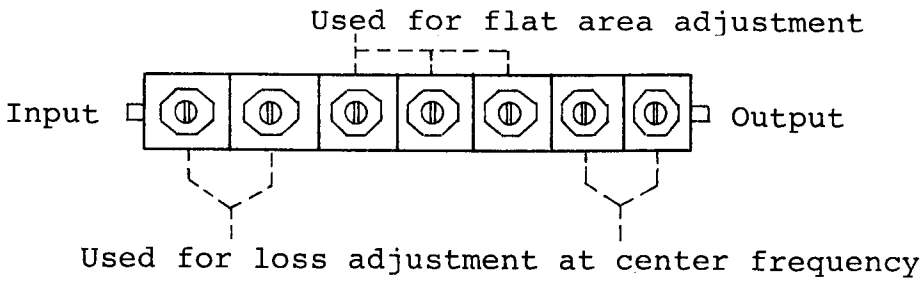

5) Check whether the loss is 10 dB ± 1 dB.

(2) 20 Hz BPF

Setup

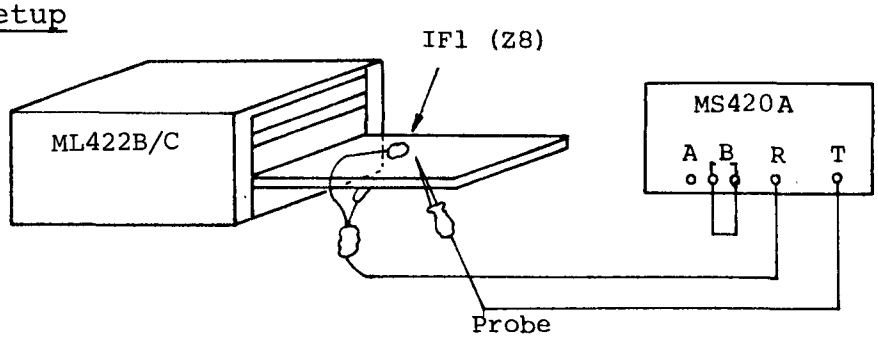

Procedure

1) Disconnect the IF1 (Z8) C50 negative terminal, and connect the MS420A output (level: -30 dBm) to it.

2) Set the ML422B/C, so that the selective BW is 20 Hz and the FULL SCALE is 0 dBm.

3) Using a high-impedance probe, connect the MS420A INPUT (T) terminal to the following test points, and adjust the following controls. The MS420A center frequency must be set to 25 kHz and the SPAN must be 20 Hz.

	Adjustment		Test point
1	R176	R181	Q63, No.1 pin
2	R186	R191	Q65, No.1 pin
3	R203	R204	Q66, No.1 pin

4) Check whether the following specifications are satisfied:

0.5 dB: ≧6 Hz
3 dB : 16 Hz ± 20%
45 dB : within ±35 Hz
60 dB : within ±70 Hz
80 dB : within ±2 kHz

5) Connect the high-impedance probe to ⑯ of IF1 (Z8).

6) Using R60, adjust gain and loss at BW switching.

7) Connect the high-impedance probe to ⑯ of IF1 (Z8).

8) Switch the selective BW to 48 kHz, and adjust L35 so that the null point (-0.05 dB) is located at 24.976 kHz.

9) Switch the selective BW to 3.1 kHz.

10) Adjust L33, L34, R119 and R120 so that the 3 dB bandwidth satisfies the specifications (see Table 2-2 in Operation Manual).

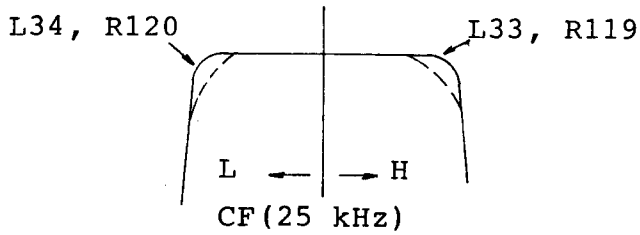

11) Using R78, adjust gain and loss at BW switching.

3) 3.1 kHz BPF

Setup

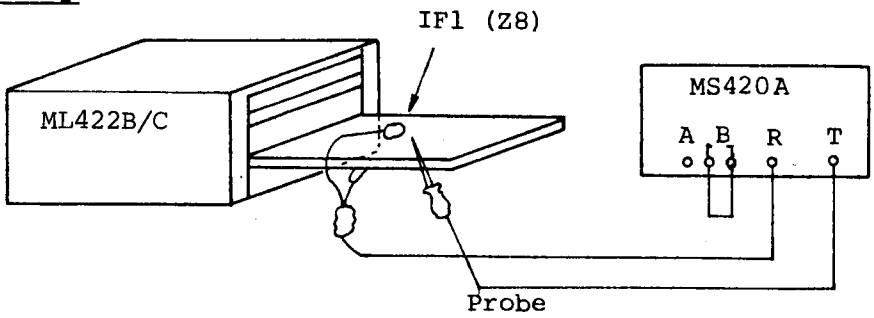

Procedure

1) Disconnect the IF1 (Z8) C50 negative terminal, and connect the MS420A output (level: -30 dBm) to it.
2) Using a high-impedance probe, connect the MS420A INPUT (T) terminal to the No. 6 pin of Q14 on IF1 (Z8).
3) Set the ML422B/C so that the selective BW is 3.1 kHz and the FULL SCALE is 0 dBm.
4) Using L20 through L31, adjust the null frequency in the order as shown below. These adjustments must be performed twice respectively.

Adjustment	Null frequency
L20	26.930 kHz
L21	23.087 kHz
L22	27.618 kHz
L23	22.512 kHz
L24	26.841 kHz
L25	23.163 kHz
L26	26.807 kHz
L27	23.193 kHz
L28	29.135 kHz
L29	21.340 kHz
L30	27.131 kHz
L31	22.916 kHz

5) Adjust L19 and L32 so that the single peak response and symmetry about the peak are obtained.

6) Check whether or not the following specifications are satisfied:

0.5 dB: ≧1.5 kHz
3 dB : 3.1 kHz ± 10%
60 dB : within ±1.85 kHz
65 dB : within ±2.4 kHz

(4) 48 kHz BPF

Setup

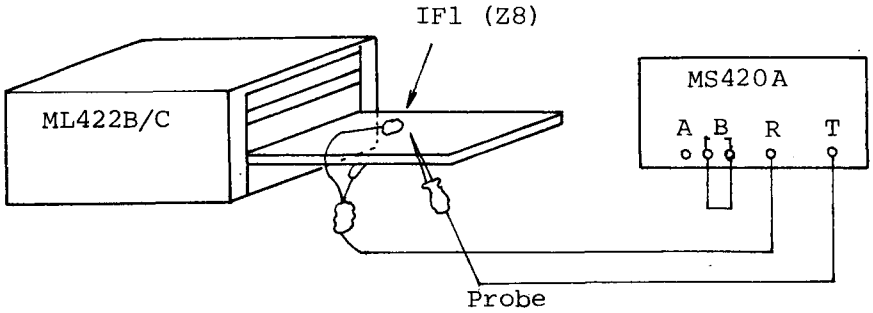

Procedure

1) Disconnect the T1-side terminal of IF1 (Z8) C19, and connect the MS420A output (level: -10 dBm) to it.

2) Using a high-impedance probe, connect the MS420A INPUT (T) terminal to the No. 8 pin of IF1 (Z8).

3) Set the ML422B/C so that the full scale is 0 dBm.

4) Using L6, L7, L9, L10, L12, L13, L15 and L16, adjust the null frequency in the order shown below. This adjustment must be performed twice, respectively.

Adjustment	Null frequency
L6	553.170 kHz
L7	648.700 kHz
L9	565.280 kHz
L10	634.750 kHz
L12	562.320 kHz
L13	638.100 kHz
L15	518.430 kHz
L16	689.640 kHz

(5) LOCAL C/N (LOCAL Carrier to Noise ratio)

Setup

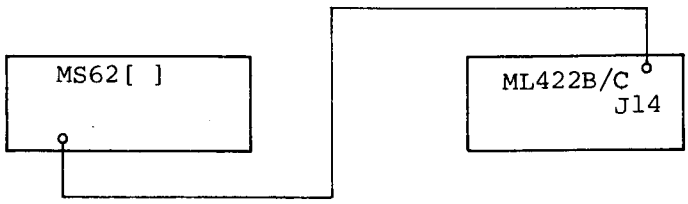

Procedure

1) Disconnect the cable (J13) which connects ML422 B/C RF2 (Z3) to LOCAL (Z4).

   Using an extender cable, connect the MS62 [ ] to J14.

2) Set the ML422B/C as follows:

   Frequency: 30 MHz

3) Using the MS62[ ], receive the 86.6 MHz local signal from ML422 B/C . Then, set the MS62 [ ] as follows:

   BW: 300 Hz
   V: 10 dB/div
   H: 2 kHz/div
   Phase lock: ON

4) Adjust R198 and R199 (and R133 and R181 as required) so that the C/N value AT A POINT ±0.5 KHz to 10 kHz distant from the carries is improved (approx. 75 dB).

3.3.5 Intrinsic Distortion

Setup

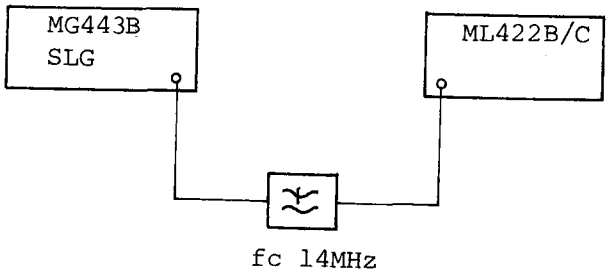

Procedure

1) Set the MG443B as follows:
   Frequency: 12 MHz
   Impedance: 75Ω, UNBALANCED
   Level: -5 dBm

2) Set the ML422B/C as follows:
   Frequency: 12 MHz
   Full scale: AUTO
   Scale range: 100 dB
   Selective BW: 20 Hz

3) Check the 12 MHz fundamental wave level, and set the frequency to the second harmonic frequency.

4) Adjust R31, R120 and R52 on RF1 (Z1) and R2 on RF2 (Z2) so that the internal distortion satisfies the specifications (see Table 2-2 in Operation Manual).

3.3.6 Phase Jitter

Procedure

1) Set the MG443B output level to 0 dBm.

2) Apply the 160 Hz phase modulation (PM) to the MG443B output, and adjust the 30 degree (P-P) sensitivity by using R167 of IF2 (Z9).

3) Using R162 of IF2 (Z9), adjust the 0.5 degree (P-P) sensitivity.

4) Repeat Steps 2) and 3).

5) Apply the 20 Hz PM to the MG443B output, and adjust the sensitivity by using R125.

3.3.7 Notch Filter

Setup

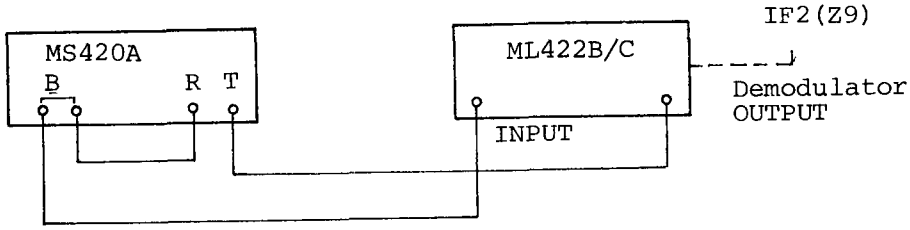

Procedure

1) Set the MS420A as follows:
   Frequency: 300 Hz to 3.4 kHz
   Output level: 0 dBm
   RBW: 100 Hz

2) Set the ML422B/C as follows:
   Frequency: 1.85 kHz
   Selective BW: 3.1 kHz, NOISE TONE
   Demodulator: USB
   Scale range: 100 dB
   Full scale: 0 dB
   Impedance: 75Ω, UNBALANCED, TERMINATED

   After this setting, press the FREQ key to stop the measurement.

3) Execute sweep with the MS420A from 300 Hz to 3.4 kHz.

4) Adjust the notch filter by using R221, R230 and R239 of IF2 (Z9).

3.3.8 Impulse Noise

Procedure

1) Set TIME to 1 minute, input a signal which exceeds the threshold level, and adjust R278 of IF2 (Z9) so that the COUNT value is 420 (for the ML422B) or 480 (for the ML422C).

2) Adjust R346 of IF2 (Z9) so that counting is performed when a signal which exceeds the threshold level by 1 dB is applied and counting is stopped when a signal which 1 dB lower is applied.

   Before this adjustment, the adjustment explained in Paragraph 3.3.9 must be performed.

3.3.9 Tone Search Threshold Level

Procedure

1) Set the threshold level to -20 dBm.

2) Measure the output voltage at the No. 1 pin of Q66 on IF2 (Z9). Let this voltage be T volt.

3) Set the threshold level to 0 dBm.

4) Adjust R273 so that the output voltage at the No. 1 pin of Q66 on IF2 (Z9) is 100 x T volt.

5) Adjust R265 so that the voltage at the No. 7 pin of Q83 on IF2 (Z9) is equal to the TTL high level when the +0.5 dBm singal is received and the voltage is equal to the TTL low level when the -0.5 dBm signal is received.

SECTION 4

TROUBLESHOOTING AND CIRCUITRY

SECTION 4
TROUBLESHOOTING AND CIRCUITRY

4.1 Introduction

This section details the procedures for troubleshooting and circuitry. Troubleshooting can be outlined as follows:

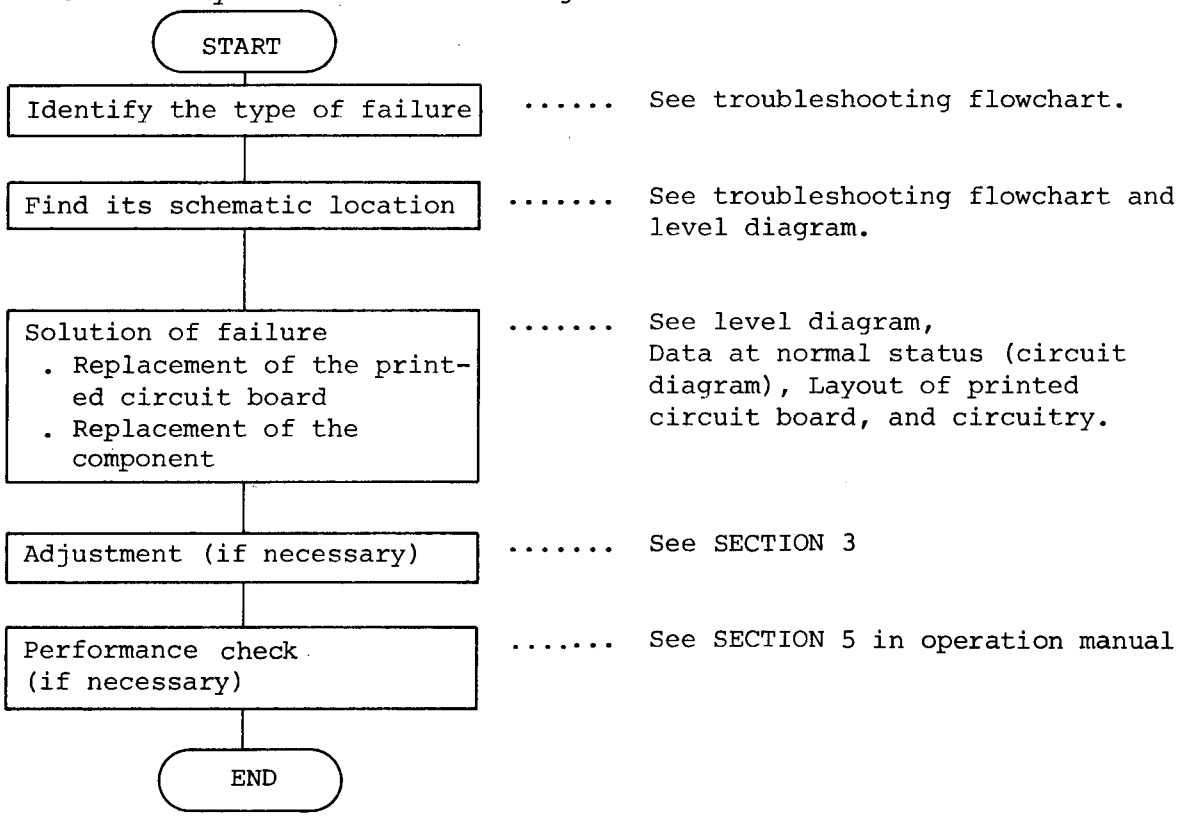

Fig. 4-1 Troubleshooting and Repair Procedures

4.2 Troubleshooting Flowcharts

Figure 4-2 shows troubleshooting flowcharts. Table 4-1 shows the relationship between malfunctions and estimated faulty locations.

If malfunction occurs, find the faulty location by using these figures and the Table. Next, find the faulty component according to the normal voltage, waveform, level, and frequency shown in the corresponding circuit diagram and by using the level diagram.

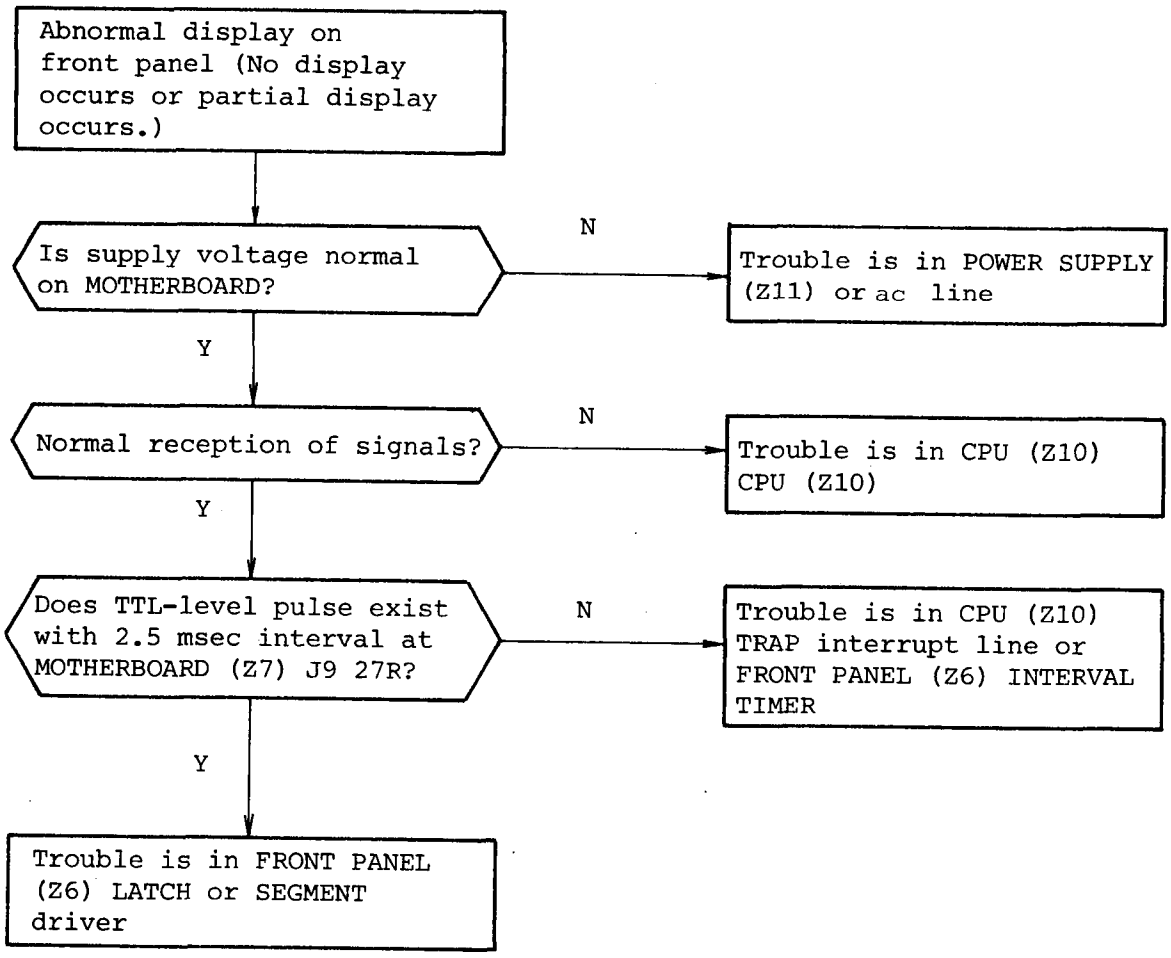

Fig. 4-2 (a) Troubleshooting Flowchart 1

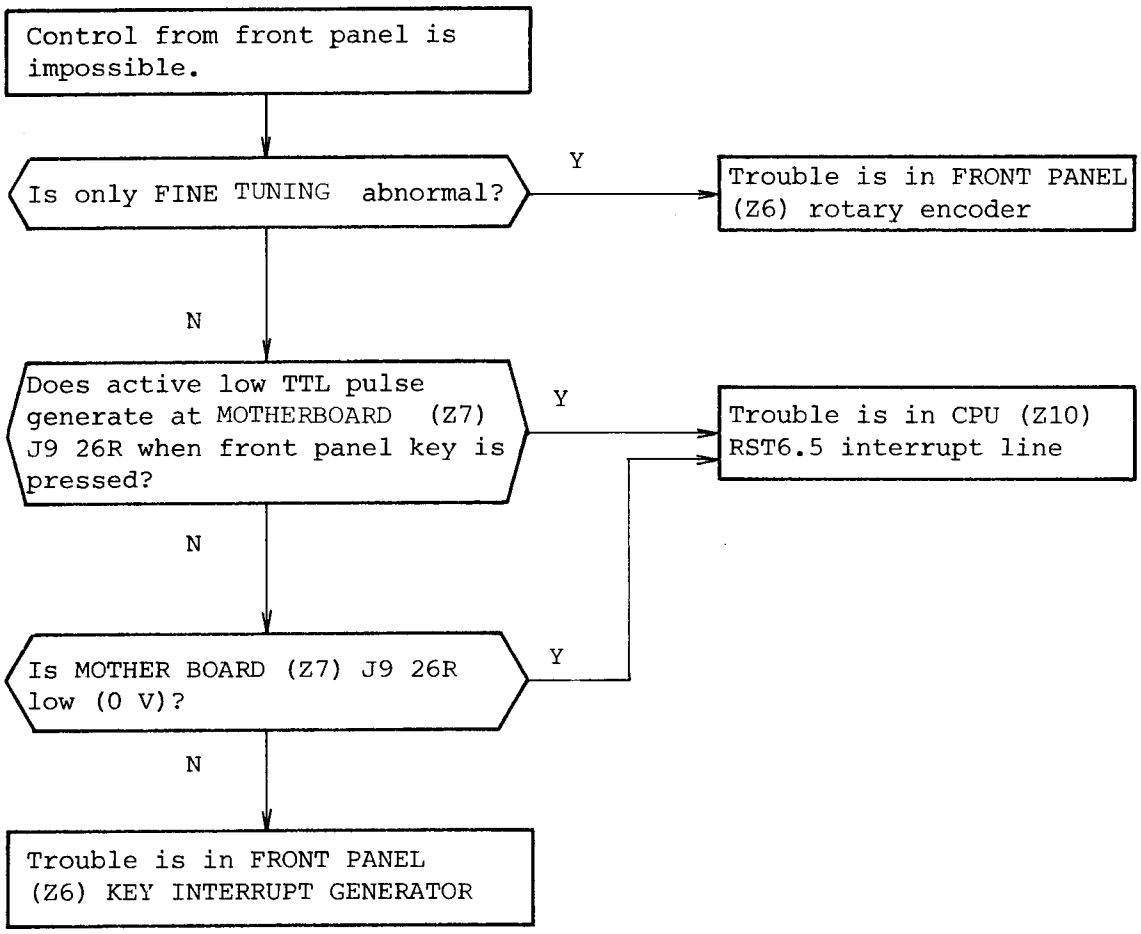

Fig. 4-2 (b) Troubleshooting Flowchart 2

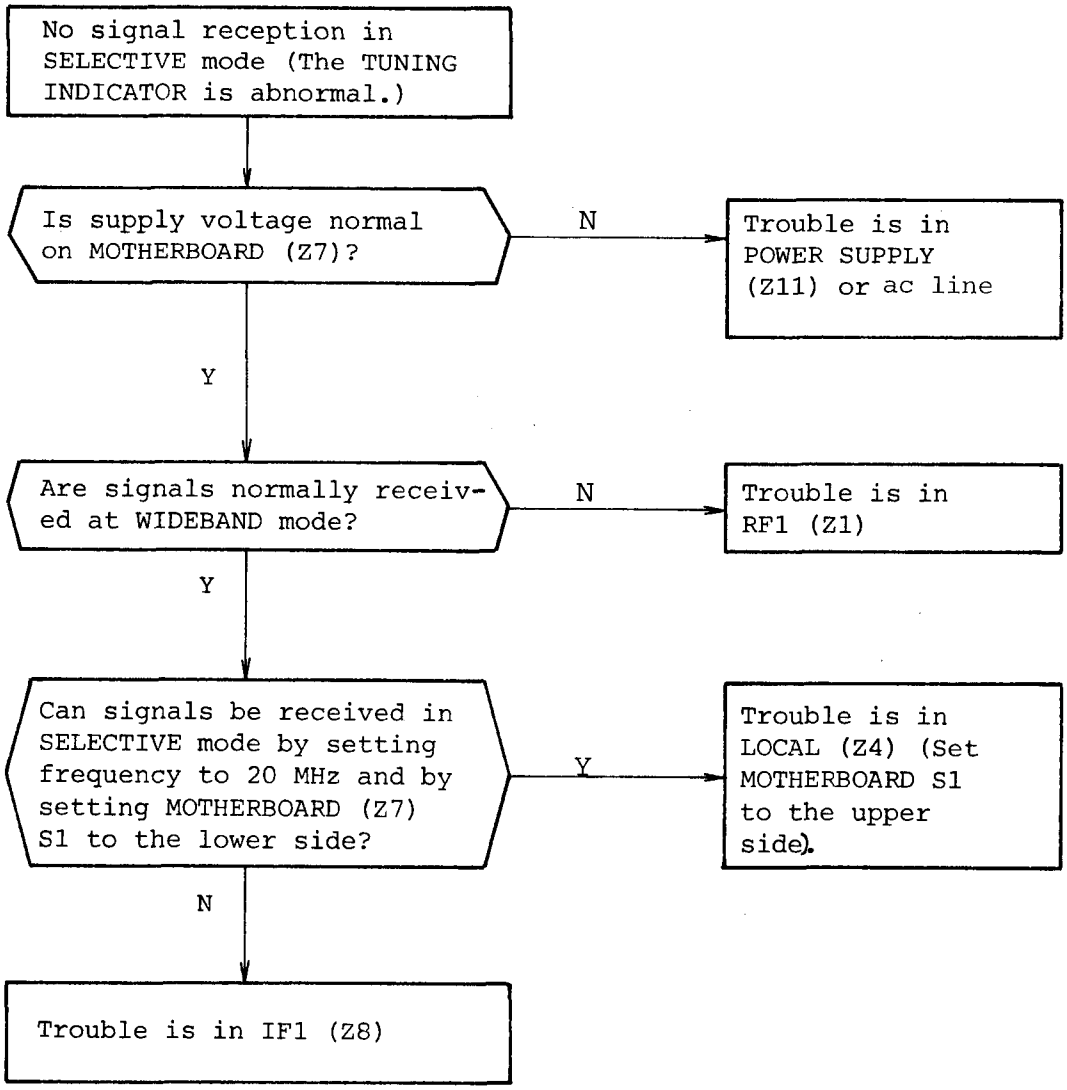

Fig. 4-2 (c) Troubleshooting Flowchart 3

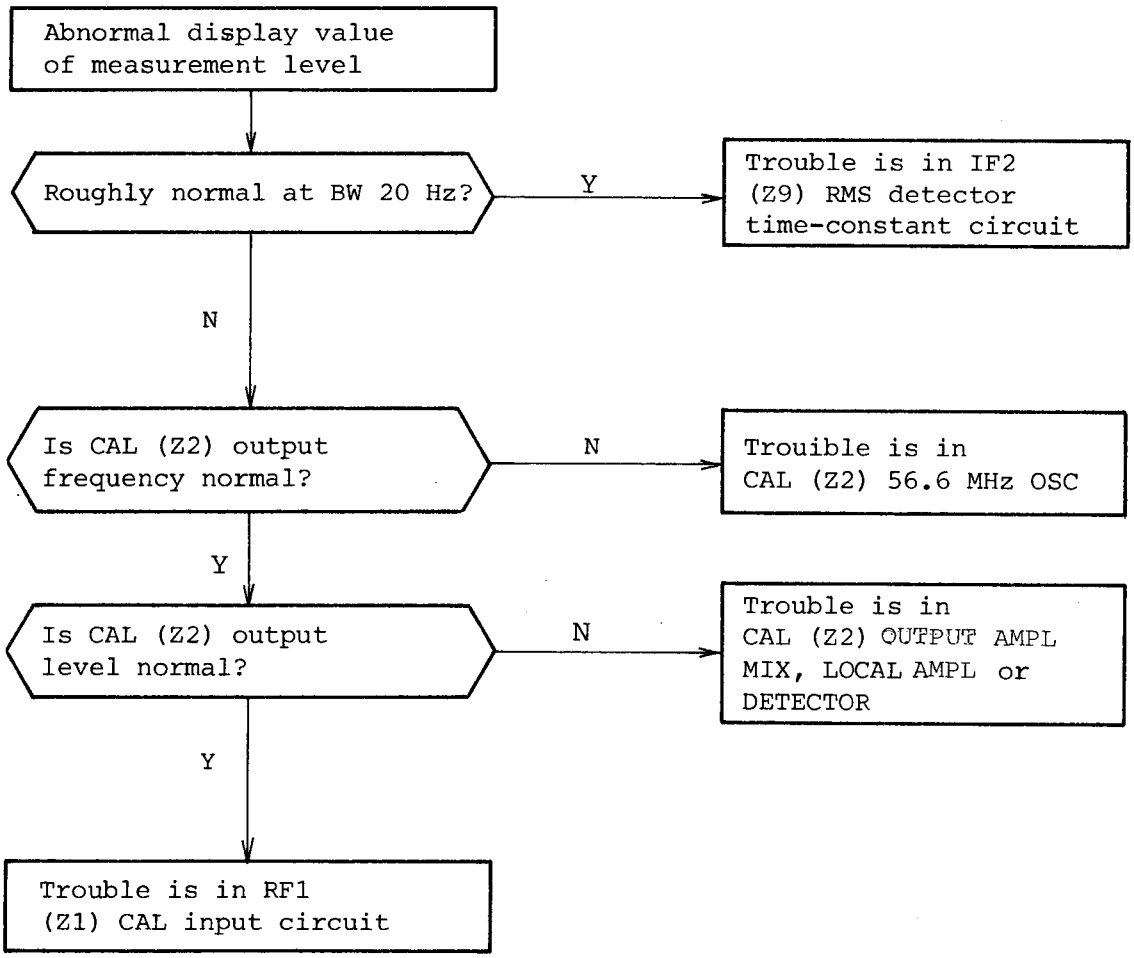

Fig. 4-2 (d) Troubleshooting Flowchart 4

Table 4-1 Correspondence between Malfunctions and Estimated Faulty Locations

Malfunction	Estimated faulty location	Schematic No.
1. Operation is impossible.	POWER SUPPLY (Z11) Power transformer, ac fuse CPU (Z10), FRONT PANEL (Z6)	29 25 to 28 22 to 24
2. No signals are received.	POWER SUPPLY (Z11) SELECTIVE mode: LOCAL (Z4) IF1 (Z8), IF2 (Z9) RF1 (Z1), RF2 (Z3) WIDEBAND mode: RF1 (Z1) IF2 (Z9)	29 17 to 20 6 to 16 2 to 4 2 to 3 10 to 16
3. Level indication is abnomal	POWER SUPPLY (Z11) CAL (Z2) RF1 (Z1) IF2 (Z9)	29 5 2 to 3 10 to 16
4. Control from the front panel is impossible.	POWER SUPPLY (Z11) CPU (Z10) FRONT PANEL (Z6)	29 25 to 28 22 to 24
5. Only IMPAIRMENT cannot be measured.	IF2 (Z9) CPU (Z10)	10 to 16 25 to 28
6. The demodulator does not operate.	IF2 (Z9) CPU (Z10)	10 to 16 25 to 28
7. Synchronization with the external reference frequency is impossible.	REFERENCE OSC (Z5) POWER SUPPLY (Z11)	21 29
8. The reception frequency is largely shifted	REFERENCE OSC (Z5) LOCAL (Z4), IF1 (Z8)	21 17 to 20 6 to 9
9. GPIB control is impossible.	CPU (Z10) POWER SUPPLY (Z11)	25 to 28 29

4.3 Level Diagram

Figure 4-3 shows the level diagram of the ML422B/C. In this diagram, the vertical axis indicates the reference level at each point, and the horizontal axis indicates analog signal blocks from the signal input terminals to the DC output. By checking the reference level at each point, the gain and loss at each point can be determined for analog circuit troubleshooting. For example, if the analog signal path is disconnected at a certain point, troubleshooting can be performed by isolating each part. If the sensitivity of the level detector (e.g., oscilloscope) is too low to detect the level, the test can be performed by inputting a signal which is 20 dB higher in level than that shown in the level diagram.

Note:

The full scale setting of the ML422B/C has 2 modes, AUTO and MANUAL. The level diagram shown in Fig. 4-3 is applicable only when the full scale is set to the MANUAL mode.

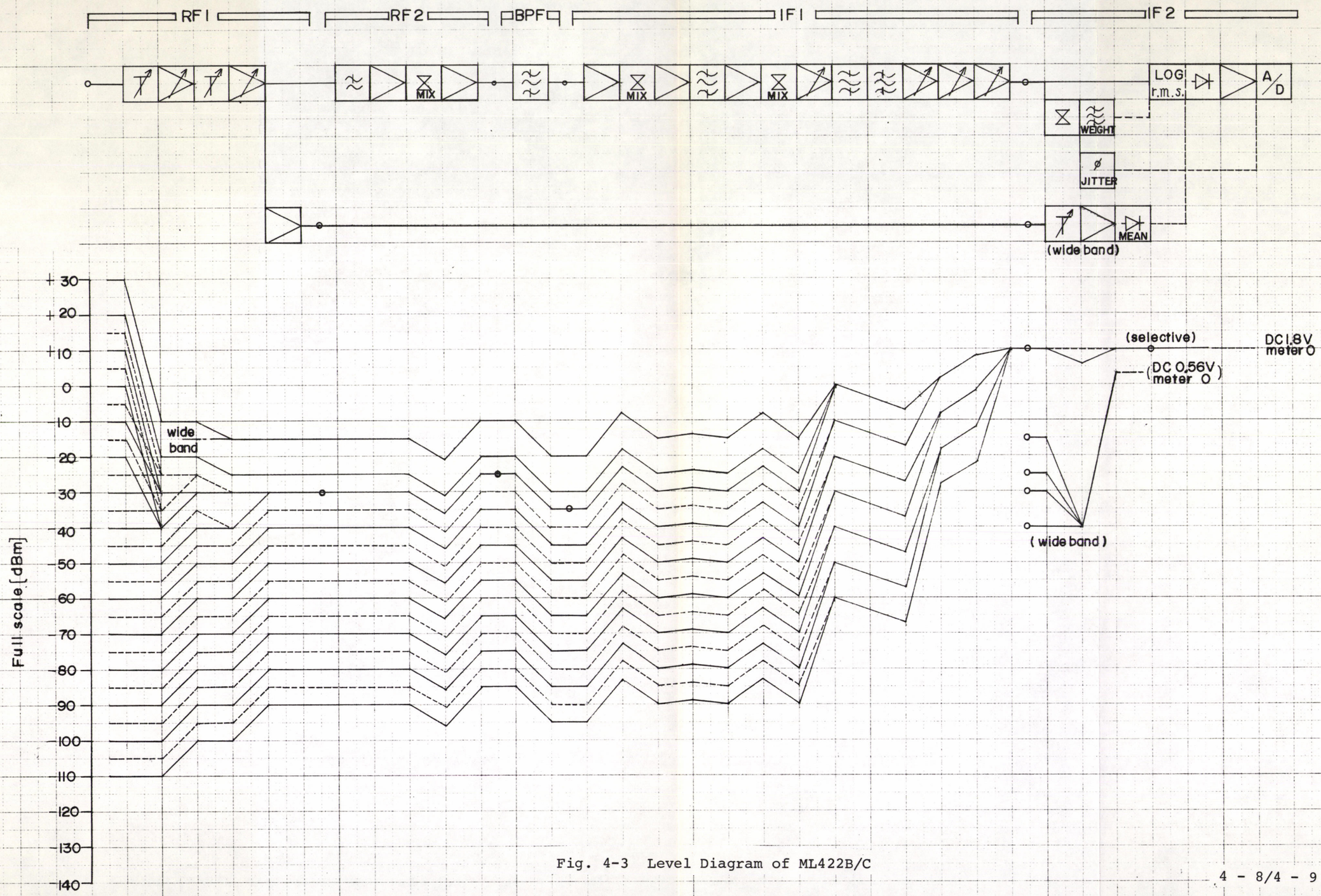

Fig. 4-3 Level Diagram of ML422B/C

4.4 Circuit Descriptions

4.4.1 Power Supply Circuit (SCHEMATICS 1 and 29)

Figure 4-4 shows the POWER SUPPLY circuit block diagram. This circuit consists of two sections. One is the power transformer section in which ac line voltage is converted to required voltage. An ac line voltage from 100 to 127 V or from 200 to 254 V can be used, by changing the wiring on the primary side of the power transformer. Refer to the following table for wiring.

The other is the dc regulator section supplying the four different dc voltages required for each circuit: +5 Vdc, +12 Vdc, +15 Vdc and -18 Vdc.

Wiring for Power Supply Changing

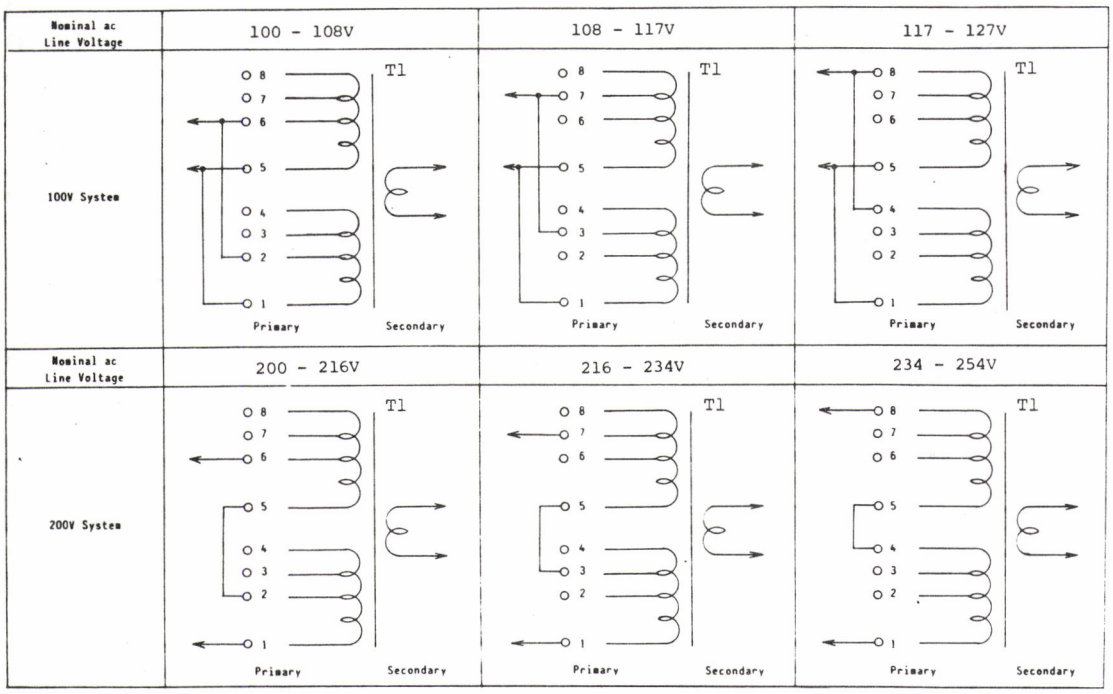

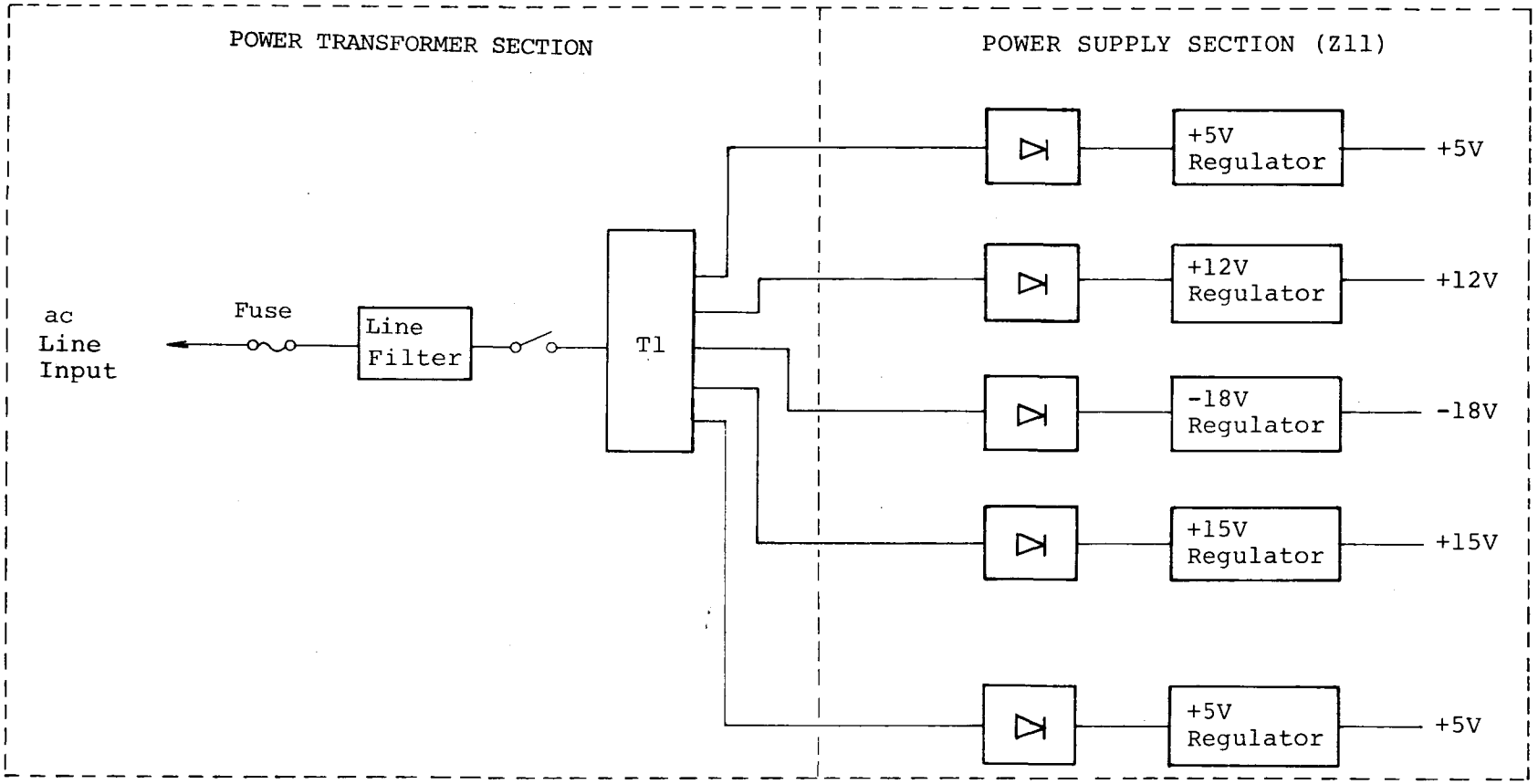

Fig. 4-4 Power Supply Circuit Block Diagram

4.4.2 RF Section (Z1, Z3)

(SCHEMATICS 2 3 and 4)

Figure 4-5 is the RF section block diagram.

The RF section consists of two blocks. The RF1 block controls the signal to be measured (without frequency conversion) according to ATT control information sent from the CPU. The RF2 block heterodynes the signal under measurement to produce the first IF signal (56.6 MHz).

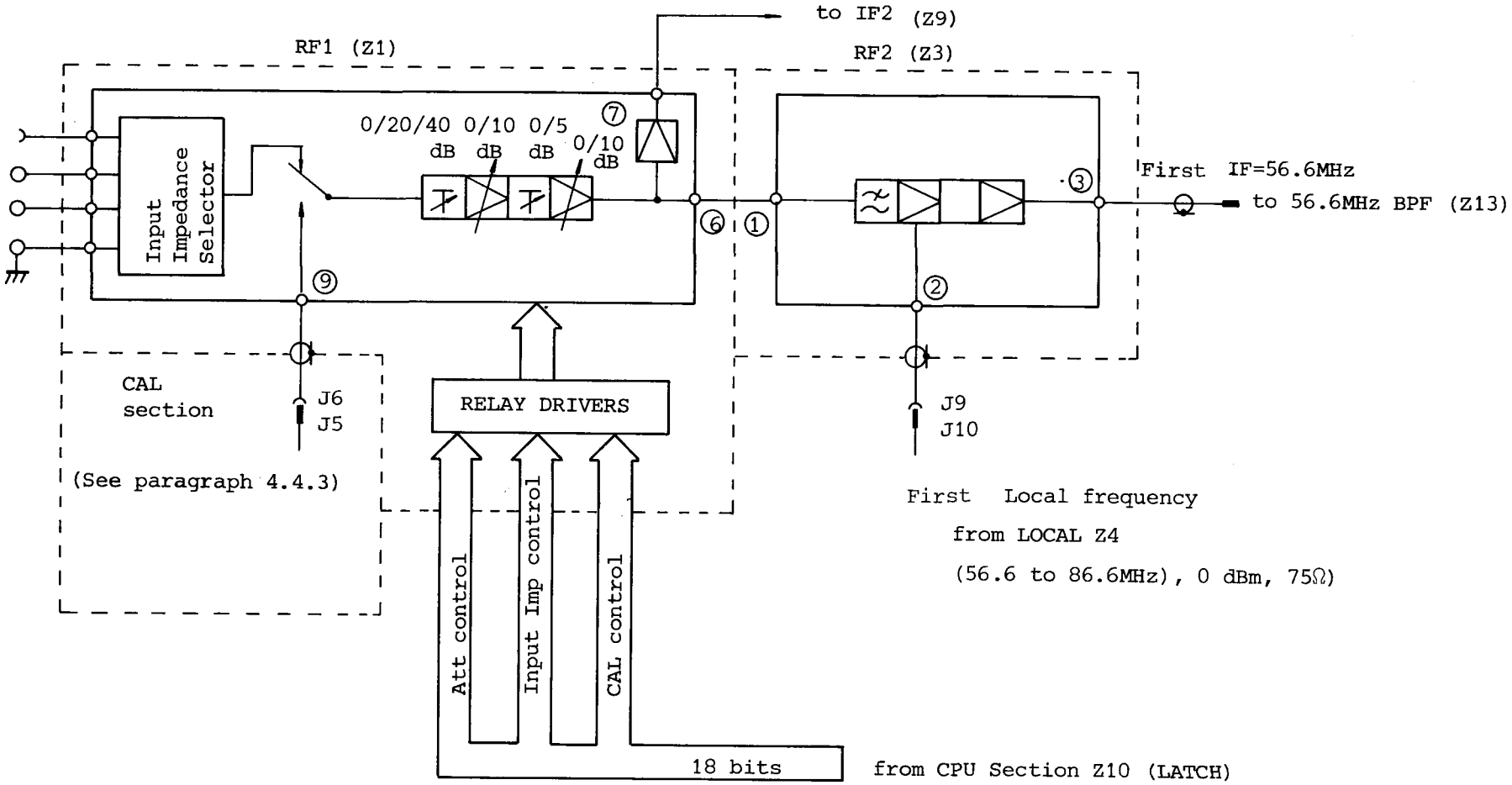

Fig. 4-5 RF Section Block Diagram

(1) RF1 (Z1) (SCHEMATICS 2 and 3)

RF1 consists of an input impedance switch circuit, RF attenuators, and variable-gain amplifiers. These circuits can all be switched by the static signals which are generated by the CPU (Z10) and IF1 (Z8). The switch signals for the BALANCED circuit switching relays K8, K10 and K12 and for the CALIBRATION circuit switching relays K16, K17, K13 and K14 are latched with the Q47 (TC40H347P) of IF1 (SCHEMATIC 9). The switching signals for other relays are latched by Q2 and Q3 (TC40H347P) of the CPU (SCHEMATIC 26).

ATTENUATORS

A 0/20/40 dB high-impedance attenuator and 0/5 dB attenuator are installed. Each of these attenuators is of the resistor/capacitor split type.

AMPLIFIERS

At the first stage (Q32, Q1, Q2, Q3, and Q4), the FET-input high-impedance amplifier is installed. The gain can be switched (0/10 dB) by switching the Q2 emitter resistance between the stages by using the Q4 switch. At the next stage (Q33, Q5, Q6, Q7, and Q8), roughly the same amplifier as that installed at the first stage is installed.

The buffer amplifiers (Q9 and Q10) for WIDEBAND mode measurement are negative-feedback amplifiers with high input impedance and low output impedance.

The POWER SUPPLY (Z11) stabilizes the power supply voltage and then supplies to these amplifiers. When troubleshooting, check whether or not these power supply circuits are normal.

(2) RF2 (Z3) (SCHEMATIC 4)

RF2 consists of a 35 MHz Low Pass Filter (LPF), a buffer amplifier, a first mixer, and a first amplifier.

35 MHz LPF

Used to remove an image signal. The cut off frequency is approx. 35 MHz. A 86 MHz to 116 MHz signal can be removed by 80 dB or more.

BUFFER AMPLIFIER

This is a negative-freedback amplifier with high input impedance and low output impedance. This amplifier consists of Q1, Q2 and Q4. Q3 is used to prevent crosstalk. The gain is approximately equal to (R8 + R9)/R9.

MIXER

This is a double-balanced ring modulator which converts a 50 Hz to 30 MHz signal into a 56.6 MHz first IF frequency signal by using the 56.6 to 86.6 MHz first local signal. The conversion loss is approx. 6 dB.

FIRST IF AMPLIFIER

This is a negative-feedback amplifier with high input impedance and low output impedance. This amplifier consists of Q5, Q6 and Q7 (T1 is used to match MIXER OUT to improve the S/N ratio). The gain is approximately equal to (R24 + R29)/R24.

4.4.3 CAL Section (Z2) (SCHEMATIC 5)

(1) Supplying constant level signals at all frequencies

Figure 4-6 shows a section of the calibration signal generator circuit which supplies a constant level signal at all frequencies.

The 56.6 MHz crystal output signal is stabilized with the SAMPLE HOLD signal output by the 100 kHz reference signal.

The 56.6 MHz signal then goes to the next stage, where it enters the Automatic Level Control (ALC) circuit.

In the ALC circuit, the final amplifier output is fed to detectors Q25, Q27 and Q28 to obtain dc voltage V_{sig} as shown in Fig. 4-6.

V_{sig} is compared with reference voltage V_{REF} set by adjusting R95.

(R95 should be adjusted after repair of this circuit to maintain accuracy).

The difference between V_{sig} and V_{REF} is then amplified by the dc amplifier Q29 and sent to variable amplifier Q11. The gain of amplifier Q11 is inversely proportional to the difference of the above voltage values. When V_{sig} equals V_{REF}, the output level of the ALC loop amplifier is constant.

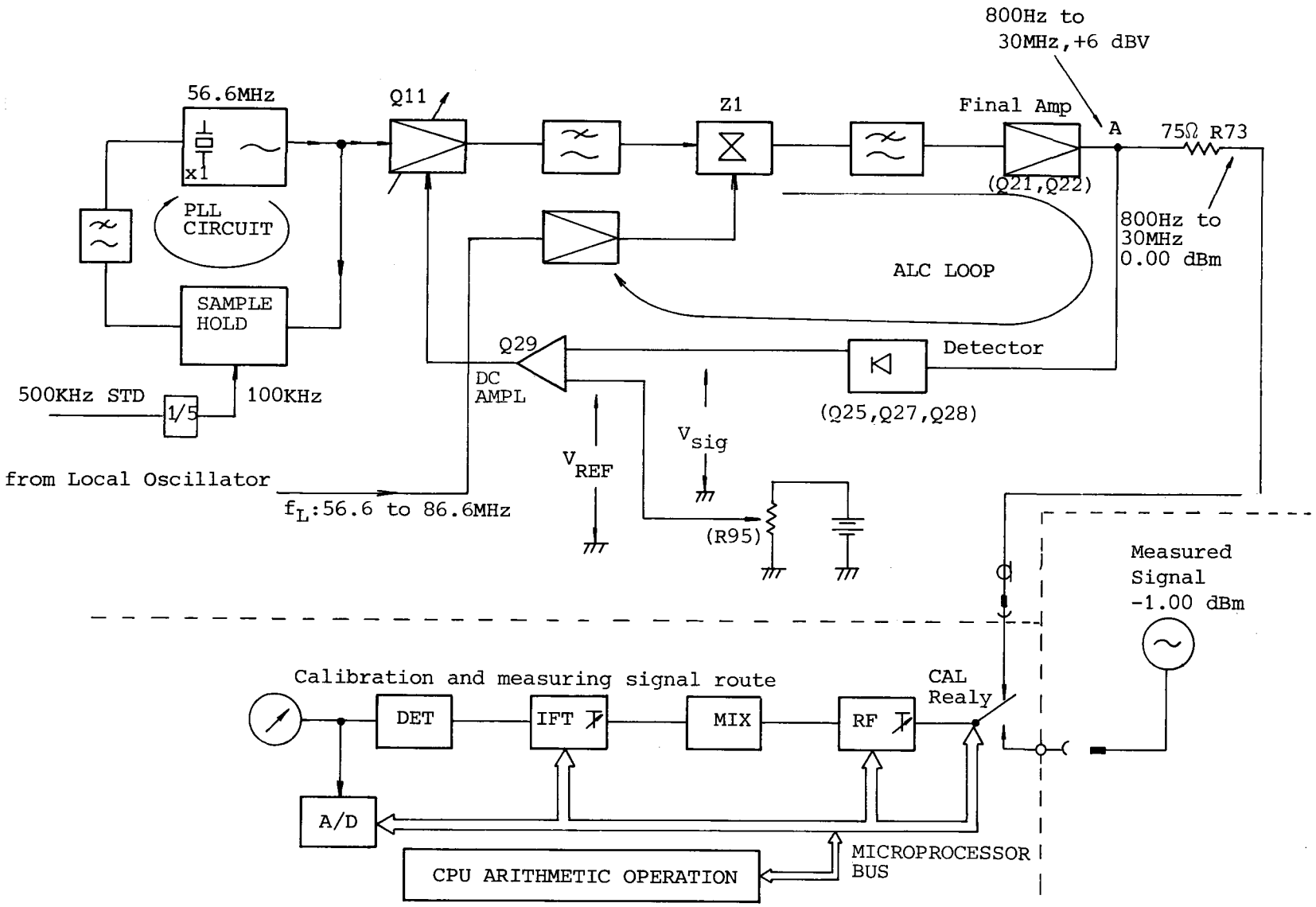

Fig. 4-6 Level Calibration Signal Generator Section

At the same time the 56.6 to 86.6 MHz first local frequency from the LOCAL section is mixed with the fixed 56.6 MHz in mixer Z1 to supply a signal with the same frequency as the measuring frequency. Since the calibration level is adjusted to 0.00 dBm by setting R95, the ALC amplifier always provides an accurately calibrated 0.00 dBm signal at all frequencies.

(2) Automatic level calibration

The programs stored in the Erasable Programmable Read Only Memory (EPROM) and Random Access Memory (RAM) execute automatic level calibration as follows:

1) Each time the operator performs a panel operation such as changing the bandwidth or measuring frequency, the CAL relay is connected to the calibration generator which supplies a calibrated 0.00 dBm signal.

2) If no operation is performed, the CAL relay is switched ON at 3 to 4 minutes interval.

3) When the UNCAL lamp does not light up, the MEASUREMENT display then displays the calibrated value (measured value - CAL value).

   When the UNCAL lamp lights up, the MEASUREMENT display displays the measured value as it is. Figure 4-7 shows an example when a -1 dB signal is measured in CAL mode (CAL value = -0.5 dB relative to 0.00 dBm/75 Ω).

4) If a frequency response error is 0.5 dB, when the 0.00 dBm calibration signal is applied to the circuit, the CPU writes an error of -0.5 dB into the RAM.

5) If the UNCAL lamp lights up, the -1.00 dBm signal level is supplied with the -0.5 dB frequency response error. Therefore, the measured value indicates -1.50 dBm.

6) If the UNCAL lamp does not light up, the CPU calculates the measured result as: (Measured value- CAL value) = -1.50 - (-0.5)
= -1.00 dBm.

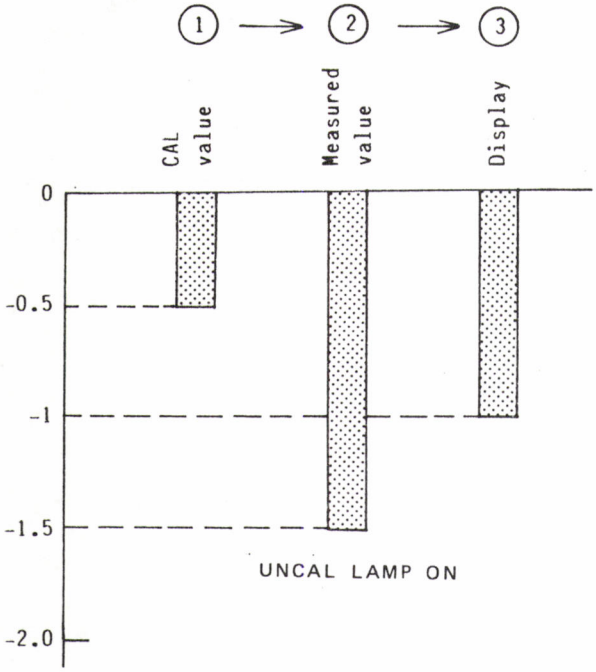

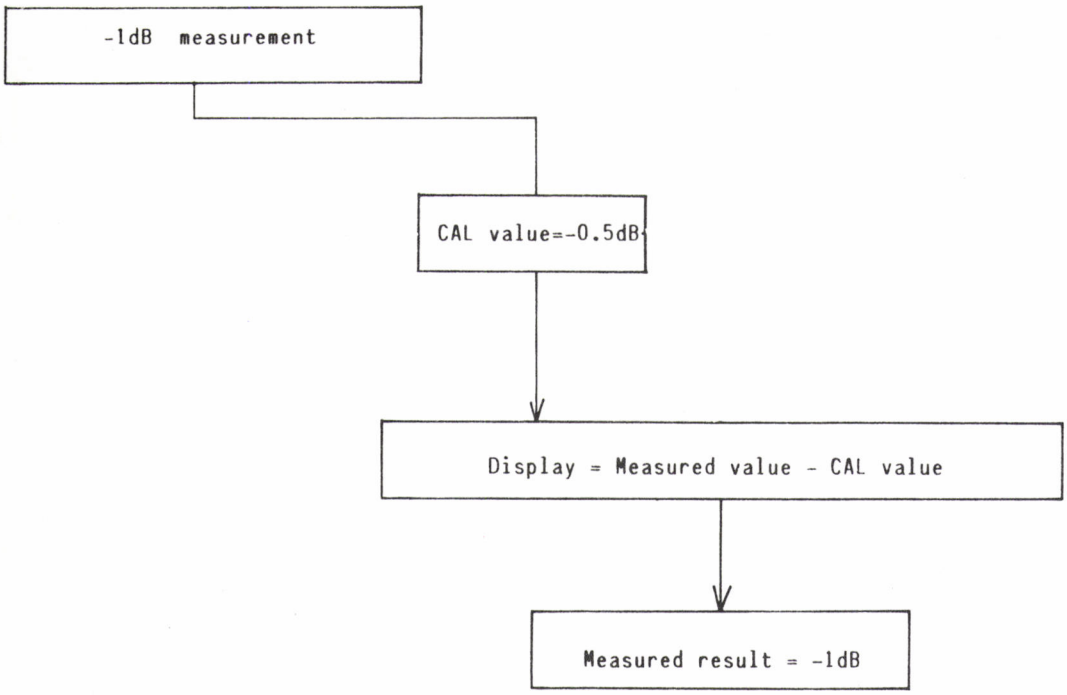

Fig. 4-7 Level Calibration Chart

4.4.4 IF1 Section (Z8) (SCHEMATIC 6 , 7 , 8 and 9)

Figure 4-8 shows the block diagram of IF1.

IF1 consists of the following circuits:

- Second mixer and second local which convert the first IF frequency (56.6 MHz) into the second IF frequency (600 kHz).
- Band Pass Filter (BPF) which determines a pass band width in SELECTIVE mode measurement.
- Third mixer which converts the second IF frequency into the third IF frequency (40 kHz for 48 kHz BW or 25 kHz for other BW).
- Counter which counts the IF frequency.
- Address recorder and latch for connection to the CPU.

First IF AMPL 2

This is a base-feedback-type amplifier, consisting of Q1 and Q2. Its gain is determined from the 56.6 MHz first BPF output impedance and the R1/R9 ratio.

This amplifier prevents internal spurious noise which is generated by inputting the second local signal to the RF stage.

Second mixer

This is a double-balanced ring modulator which converts a 56.6 MHz signal into a 600 kHz signal.

Second local buffer

This is a buffer amplifier which prevents signal leakage into the second local circuits, and amplifies a 56 MHz local signal up to the mixer operation level.

Second AMPL 1

This is a buffer amplifier for impedance matching of the second mixer with the 48 kHz BPF.

48 kHz BPF

This BPF has the Chebyshev characteristics with center frequency 600 kHz and 3 dB bandwidth 48 kHz. The impedance is 1 kΩ.

Second IF AMPL 2

This is a negative-feedback amplifier with input impedance 1 kΩ and low output impedance. This amplifier consists of Q7 and Q8. The gain is approximately equal to (R35 + R36)/R35.

Third mixer

This is a double-balanced ring modulator which converts a 600 kHz signal into a 40 kHz or 25 kHz signal.

Third local buffer

This is a buffer amplifier which prevents signal leakage into the third local circuit and amplifiers a 560 kHz or 625 kHz local signal up to the mixer operation level.

STEP AMPL 1

This is a step amplifier consisting of the MA332 operational amplifier. The reference gain is +15 dB. The gain can be switched to +10 dB (R56) or 0 dB (R54).

20 Hz BPF

This is a 3-stage BPF containing a crystal filter of the matched pair type. The center frequency is 25 kHz, and the 3 dB bandwidth is 16 Hz.

3.1 kHz BPF

This BPF has the Chebyshev characteristics with center frequency 25 kHz and 3 dB bandwidth 3.1 kHz. The impedance is 1 kΩ.

STEP AMPL 2

This is a step amplifier consisting of the MA332 operational amplifier. The reference gain is +5 dB. The gain can be switched to +15 dB (R73), +25 dB (R74), or +35 dB (R75).

BW LOSS COMPRENSATION

This circuit compensates the BW 20 Hz gain (R79), the BW 3.1 kHz gain (R78), the BW 48 kHz gain (R81), the BW 3.1 kHz 3 dB bandwidth (L33, R119, L34 and R120), and BW 48 kHz center flatness (L35).

STEP AMPL 3

This is a step amplifier consisting of the MA332 operational amplifier. The reference gain is +5 dBm. The gain can be switched to +15 dB (R116), +25 dB (R117) or +35 dB (R118).

Second local 56 MHz PLL

This PLL consists of Q49 through Q52 and Q54 through Q60.

The 56 MHz signal generated by the Voltage Control crystal Oscillator (VCXO) (consisting of X1, Q50 and Q51) is synchronized using a 1 MHz signal which is generated by dividing the internal reference signal. The diode bridge (Q56 through Q59) is used as the phase detector. A sampling pulse is generated by Q60 (75S02).

Limiter

This limiter amplifier consists of the operational amplifier. Its gain is 100 dB higher.

X10 multiplier

This is a X10 multiplying circuit consisting of PLL. This circuit is used to shorten the gate time for frequency readout.

Counter

This consists of μPD8253C-5 (16-bit counter X3), which is IC for a timer. Also the gate time is internally generated.

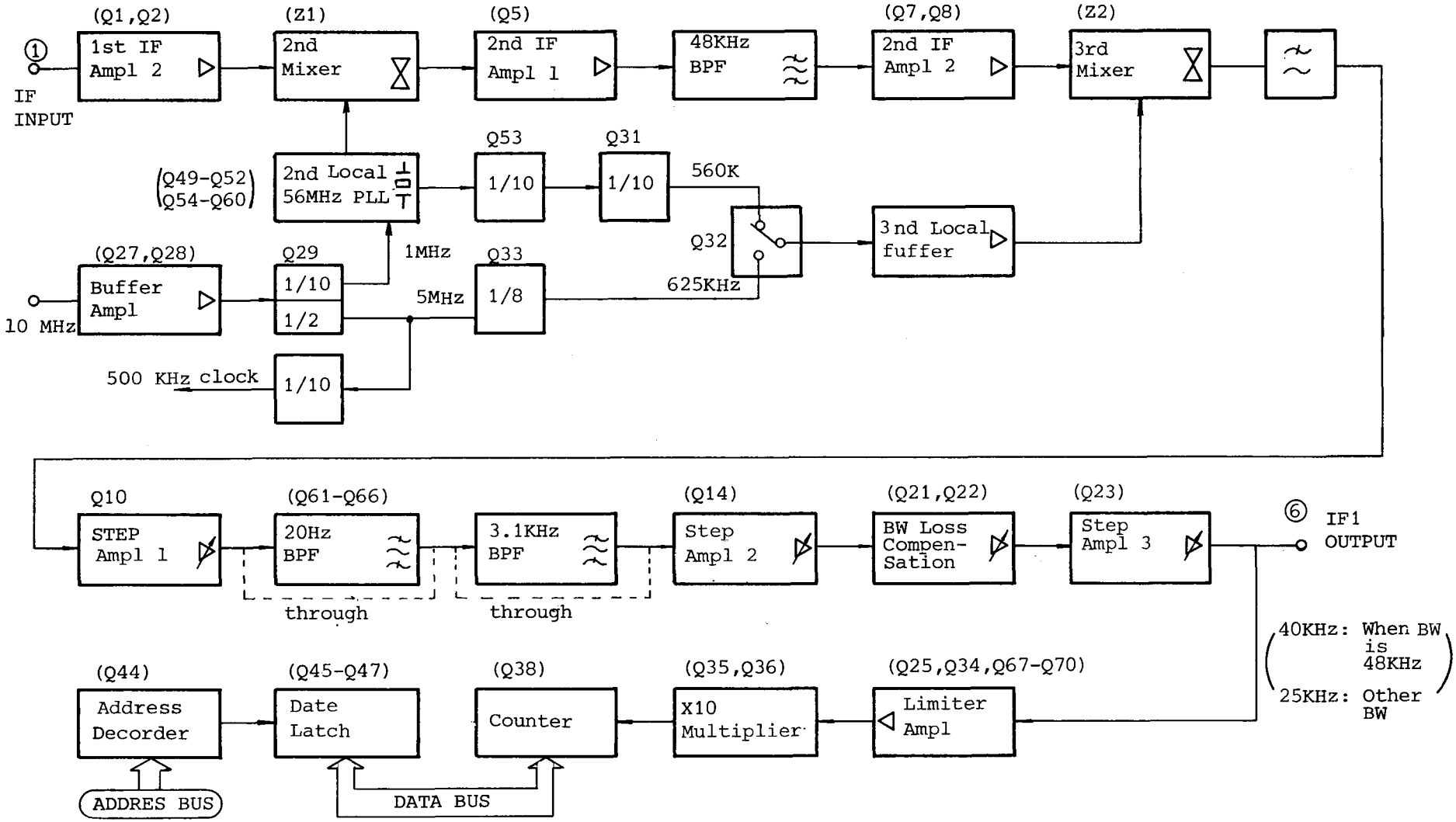

Fig. 4-8 IF 1 Block Diagram

4.4.5 IF2 Section (Z9) (SCHEMATIC 10 to 16)

Figure 4-9 shows the block diagram of IF2. IF2 consists of a wideband detector, a demodulator, an imparement measuring circuit, an rms detector, a high-speed/peak detector, and an A/D converter.

Wideband amplifier and detector

The wideband amplifier consists of Q1 through Q3, and the wideband detector consists of Q5 through Q8.

A signal which is input to this amplifier is amplified by approx. 38 dB by Q1 (UA733CN), and then amplified by 6 dB by the negative-feedback circuit (Q2 and Q3). The amplified signal is converted into a dc signal by the wideband mean-value detector (Q5, Q6 and Q7). The diode non-linearity is compensated and the stability is improved since negative feedback is applied by the detector diodes Q6 and Q7 in the amplifier detector circuit.

OVERLOAD comparator

This circuit compares the dc voltage (supplied from the wideband detector) with the reference voltage in order to check whether or not the power applied to the RF stage exceeds the reference value.

Demodulator

This circuit demodulates a Single Sideband (SSB) signal into the original voice-frequency signal. Since the SSB signal does not contain a carrier, a carrier must be added to demodulate the SSG signal. Since the BW for the channel of the ML422B/C is 3.1 kHz, a signal of which the frequency is ±1.85 kHz distant from the IF center frequency (25 kHz) is applied to the product

detector (Q75) in order to demodulate the SSB signal into a 0.3 to 3.4 kHz voice-frequency signal.

Phase detector circuit

This circuit measures the quantity of phase jitter degree (p-p) contained in a 1 kHz tone signal.

The signal applied to this circuit is band-limited by the BW 600 Hz BPF, and then input to Q36 (CD4046 BCN) and is detected by the phase detector consisting of PLL.

A signal of which the frequency is higher than the detected signal by 20 Hz or more is picked up as a jitter component, and is band-limited by the 300 Hz LPF, then is sent to the peak detector (Q40, Q42 to Q45), and is converted into a dc signal. This dc signal is converted into a digital signal by the A/D converter (Q92), processed by the CPU, and then displayed at the MEASUREMENT display.

Weighting and notch filters

This is an active filter consisting of an operational amplifier, resistor and capacitor.

In the ML422B, the weighting filter is used for the C message defined in the Bell system. In the ML422C, the weighting filter is used for psophometric weighting defined in CCITT Rec. P.53. The notch filter removes the 1010 Hz ±15 Hz signal (which is used to measure a signal-to-noise ratio) by approx. 60 dB.

RMS detector and log circuit

The Q73 (AD536) is used as the rms detector. This IC can perform a square average. Log output is supplied from the log converted contained in it.

High-speed detector

This is a peak detector consisting of Q79, Q80 and Q81. This circuit is used to detect impulse noises. In the hot tone search mode, this detector is used as a mean-value detector since a video filter is inserted after detection.

Threshold level generator

This circuit generates a threshold voltage at IMPULSE NOISE or TONE SEARCH mode. Using an 8-bit D/A converter (Q82) contained in this circuit, the attenuation level can be changed by 30 dB in 1 dB steps.

A/D converter

This is an integral type A/D converter with 13-bit resolution. This circuit converts an alalog voltage (0 to 1.999 V) into a digital value. The conversion time is approx. 10 msec.

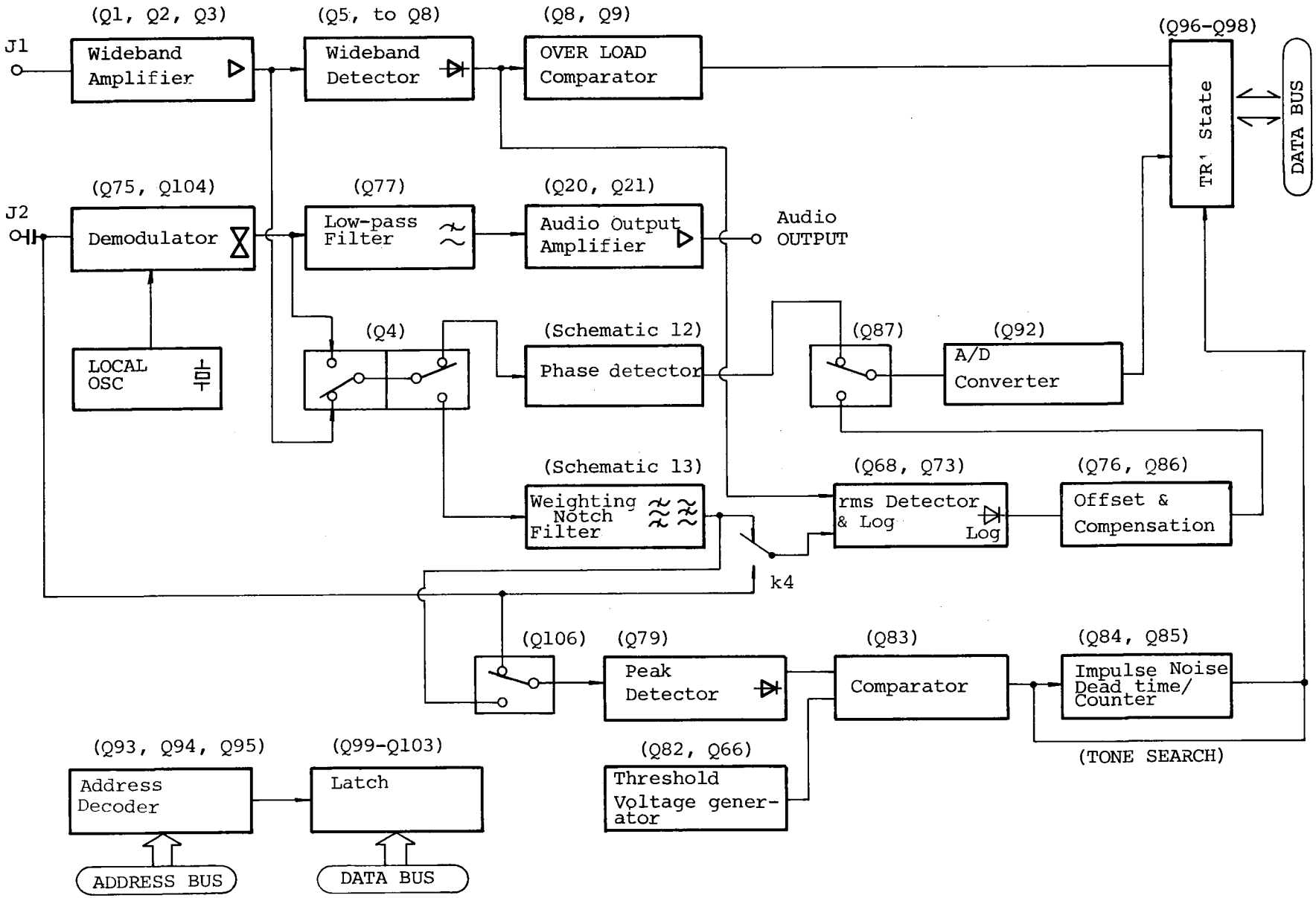

Fig. 4-9 IF2 Block Diagram

4.4.6 LOCAL Section (Z4) (SCHEMATIC 17, 18, 19 and 20)

Figure 4-10 shows the block diagram of the LOCAL section. This section consists of three 1/N-type Phase Locked Loops (PLL) and one SUM loop. Each component has the following frequency range:

PLL1 : 81.6 MHz to 82.4 MHz (80 Hz step)
PLL2 : 75.8 MHz to 95.7 MHz (100 kHz step)
PLL3 : 48 MHz to 78 MHz (2 MHz step)
SUM loop: 56.6 MHz to 86.6 MHz (1 Hz step)

The frequency information sent from the CPU is latched by the Q4 and Q7 (TC40H374P). This frequency data is used as the N information for frequency setting, by PLL1, PLL2 and PLL3. Moreover, this digital data is converted into analog voltage by the D/A converter in PLL2, PLL3, and the sum loop, and is used as the preset voltage for various Voltage-Controlled Oscillators (VCO).

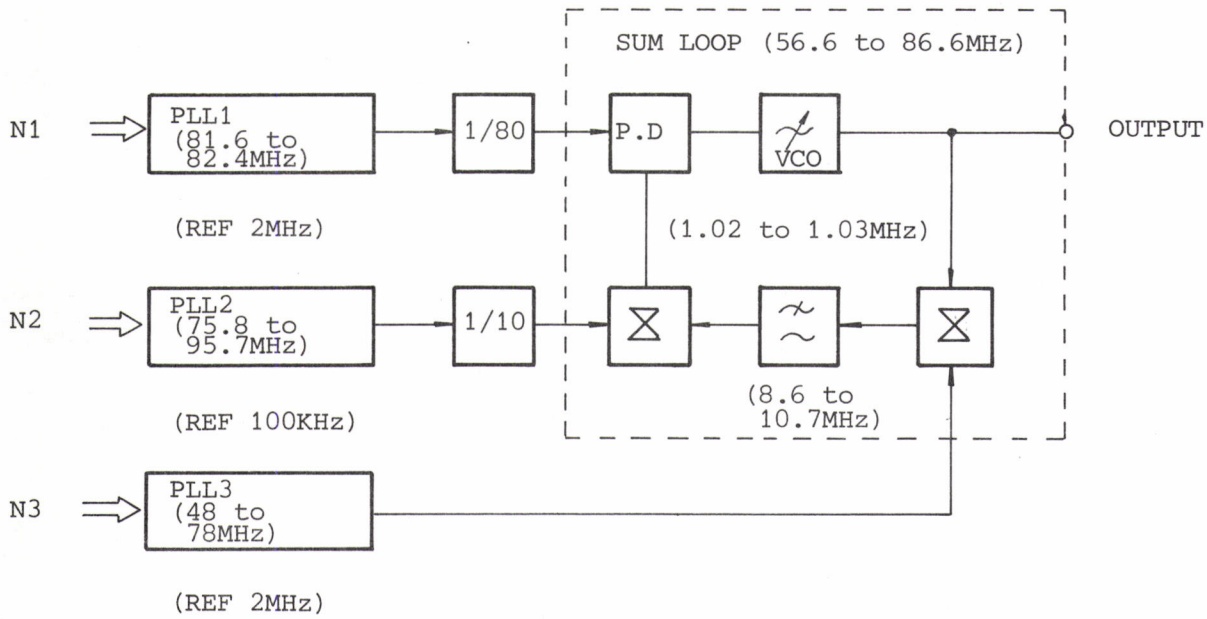

Fig. 4-10 LOCAL Section Block Diagram

PLL1

This circuit processes the low-order 4 digits of an 8-digit local frequency. The frequency setting information is represented in BCD, and the high-order 2 digits are latched by Q6, with the low-order 2 digits are latched by Q7. This setting information is equal to the low-order 4 digits of the frequency indicated at the FREQUENCY display.

PLL2

This circuit processes the middle-order 2 and 1/2 digits (1 kHz digit odd number, 100 kHz digit and 10 kHz digit) of an 8-digit local frequency. The frequency setting data is represented in binary notation, and is latched by Q5. This setting data has the following value:

(Binary value obtained by converting the 10 kHz and 100 kHz digits indicated at the FREQUENCY display)

plus 64 (hexadecimal)

The 64 (hexadecimal) is added only when the digit at the 1 MHz is an odd number.

PLL3

This circuit processes the high-order 1 and 1/2 digits (10 MHz digit and 1 MHz digit even number) of an 8-digit local frequency. The frequency setting data is represented in binary notation, and is latched by Q4. This setting data has the following value:

(Binary value obtained by dividing the high-order 2 digits (10 MHz digit and 1 MHz digit) of the frequency indicated at the FREQUENCY display by 2, and by rounding down the decimal fractions (to obtain an integer), and by converting the result into a binary number)

plus 02 (hexadicimal)

SUM loop

This circuit sums up the PLL1, PLL2 and PLL3 frequencies, and provides a 56.6 to 86.6 MHz (1 Hz step) local signal.

4.4.7 REFERENCE OSC Section (Z5) (SCHEMATIC 21)

Figure 4-11 is the REFERENCE OSC Section block diagram. For INTERNAL operations, the Z_1 Voltage control Oscillator (VCO) is adjusted by turning R53 until the oscillating frequency is 50 MHz.

For EXTERNAL operations, part of the Z_1 VCO output is looped via the EXT-INT switch to the phase-locked loop circuit. The 50 MHz oscillator output can be used as an accurate signal source stabilized with the SAMPLE HOLD signal, which is controlled by an external reference crystal signal.

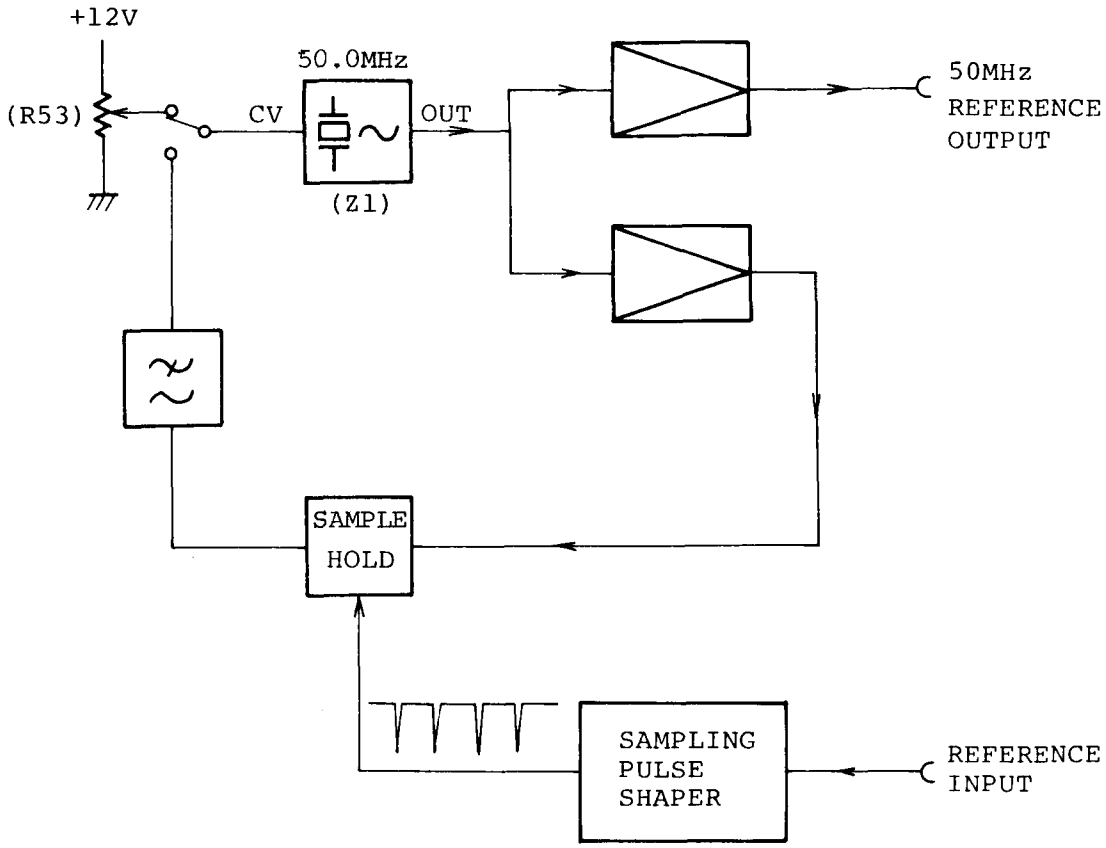

Fig. 4-11 REFERENCE OSC Section Block Diagram

4.4.8 FRONT PANEL Section (Z6) (SCHEMATICS 22 , 23 and 24)

Figure 4-12 is the FRONT PANEL Section block diagram.

The front panel features all LED displays dynamically driven for low power dissipation and interrupt generation circuits for sending signals to the CPU by pushbutton operation and by interval timer.

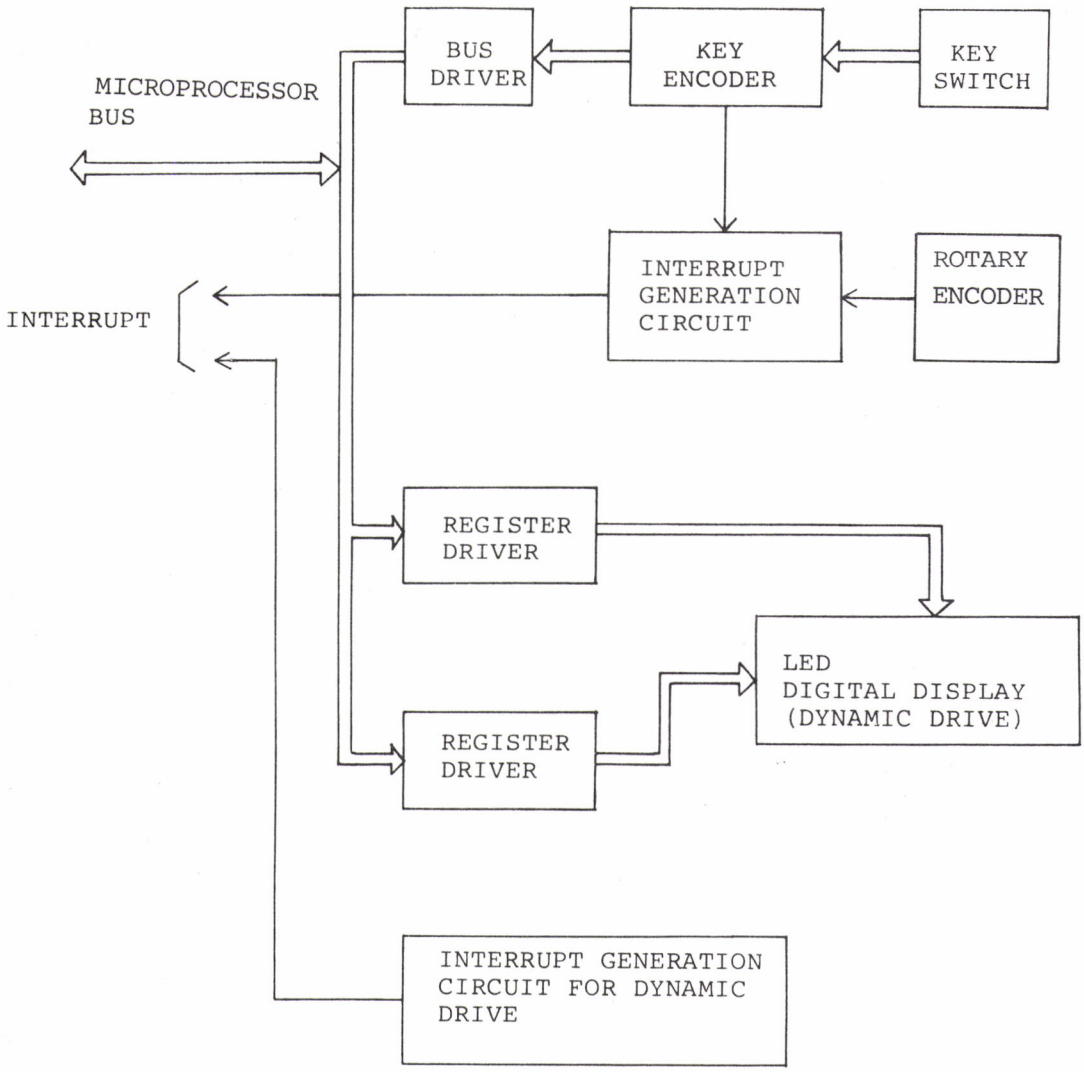

Fig. 4-12 FRONT PANEL Section Block Diagram

Rotary encoder

A disk with slits cut around the edge is connected directly to the dial. When the dial is rotated, light projected from a light emitting diode (LED) passes through the slits and is detected by a phototransistor. Phototransistor outputs are shaped in the pulse shaping circuit. One of the outputs is used for the counter clock signal and interrupt timing. The other is used to set the counter UP or DOWN, depending on which way the dial is turned. Thus, FINE dial tuning data is sent to the LOCAL Section to fine tune the local frequency.

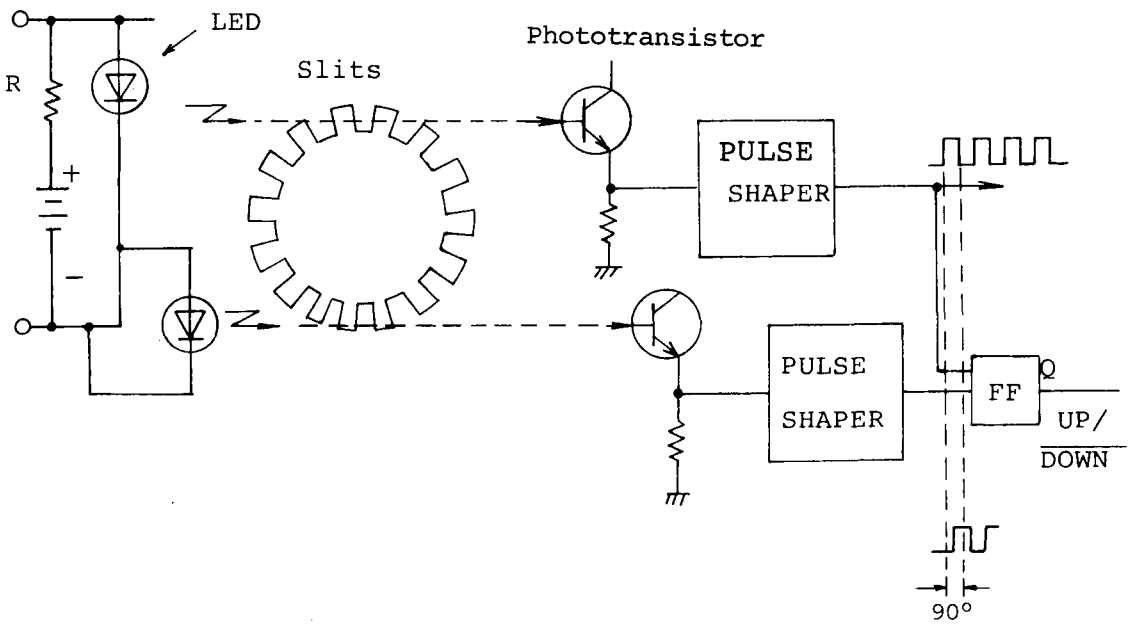

Fig. 4-13 Rotary Encoder

4.4.9 CPU Section (Z10) (SCHEMATICS 25 26 27 and 28)

Figure 4-14 is the CPU Section block diagram. The CPU writes data into and reads data from Read Only Memory (ROM) and Random Access Memory (RAM). The CPU transmits data to or receives data from each section of ML422B/C. There are three busses:

- Bidirectional data bus
- Control bus
- Address bus

The ML422B/C uses a battery for RAM data backup, so that RAM data is secured while ML422B/C power is off.

This battery is charged during power supply because of floating use.

8085 is used as the CPU. Since the address space of 8085 is very wide, it is divided as shown in Table 4-2.

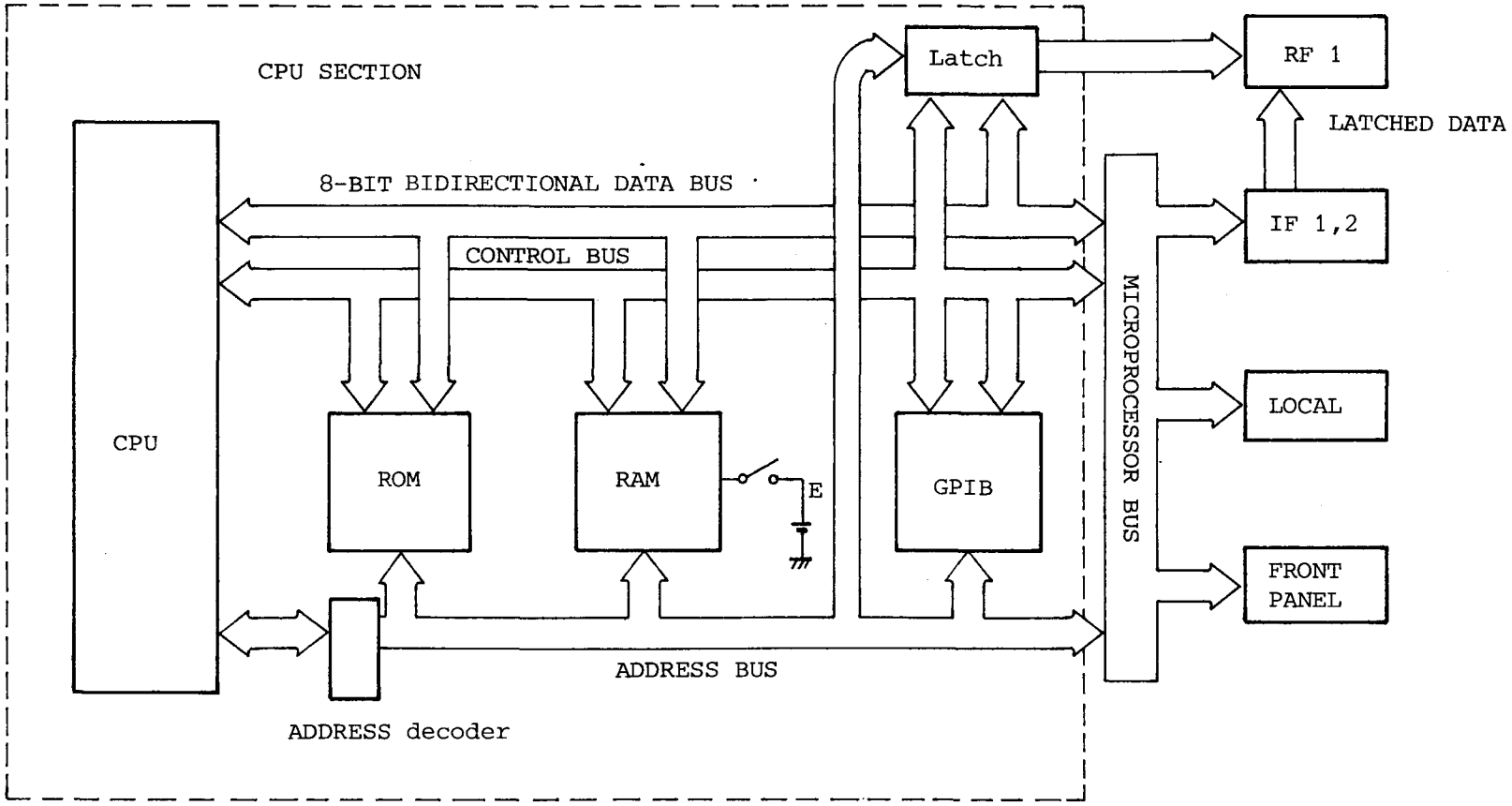

Fig. 4-14 CPU Section Block Diagram

Table 8-2 CPU Address Map

ADDRESS (hexadecimal)	Usage
0000 - 0FFF	ROM (Q18), INTERRUPT
1000 - 1FFF	ROM (Q19), MEASURE
2000 - 2FFF	ROM (Q20), GPIB
3000 - 37FF	RAM (Q21), WORK
3800 - 3FFF	Not use
4000 - 4FFF	ROM (Q22), OPTIONAL
5000 - 53FF	RAM (Q16, Q17), backed up Memory
5400 - 5FFF	Not use
6000 - 600F	I/O FRONT PANEL (Z6) and RF1 (Z1)
6010 - 6FFF	Not use
7000 - 700F	I/O, IF1 (Z8)
7010 - 7FFF	Not use
8000 - 800F	I/O, GPIB
8010 - 8FFF	Not use
9000 - 900F	I/O, IF2 (Z9)
9010 - 9FFF	Not use
A000 - AFFF	ROM (Q23), Subroutine
B000 - B003	TIMER (Q29)
B004 - FFFF	Not use

CPU (Z10) troubleshooting

Since CPU board troubleshooting is very difficult, a faulty CPU board should be replaced when found. However, troubleshooting of the CPU board can be carried out, using the following equipment:

FLUKE 9010A MICRO-SYSTEM TROUBLESHOOTER
8085 INTERFACE POD

Procedure

1) Using the extender board, pull out the CPU board (Z10) from the ML422B/C cabinet.

2) Remove Q30 (μPD8085AC) from the socket.

3) Insert the 8085 INTERFACE POD adaptor into the socket for Q30.

4) Perform the bus test.

   Check the CPU board (Z10) bus and the IC connected to the bus.

5) Perform the ROM test.

   Check the ROM by comparing the signature data with the standard signature obtained from the normal CPU board in the LEARN mode.

6) Perform the RAM test.

   Check the RAM in the RAM SHORT mode.

Note: The CPU address map is shown in Table 4-2.

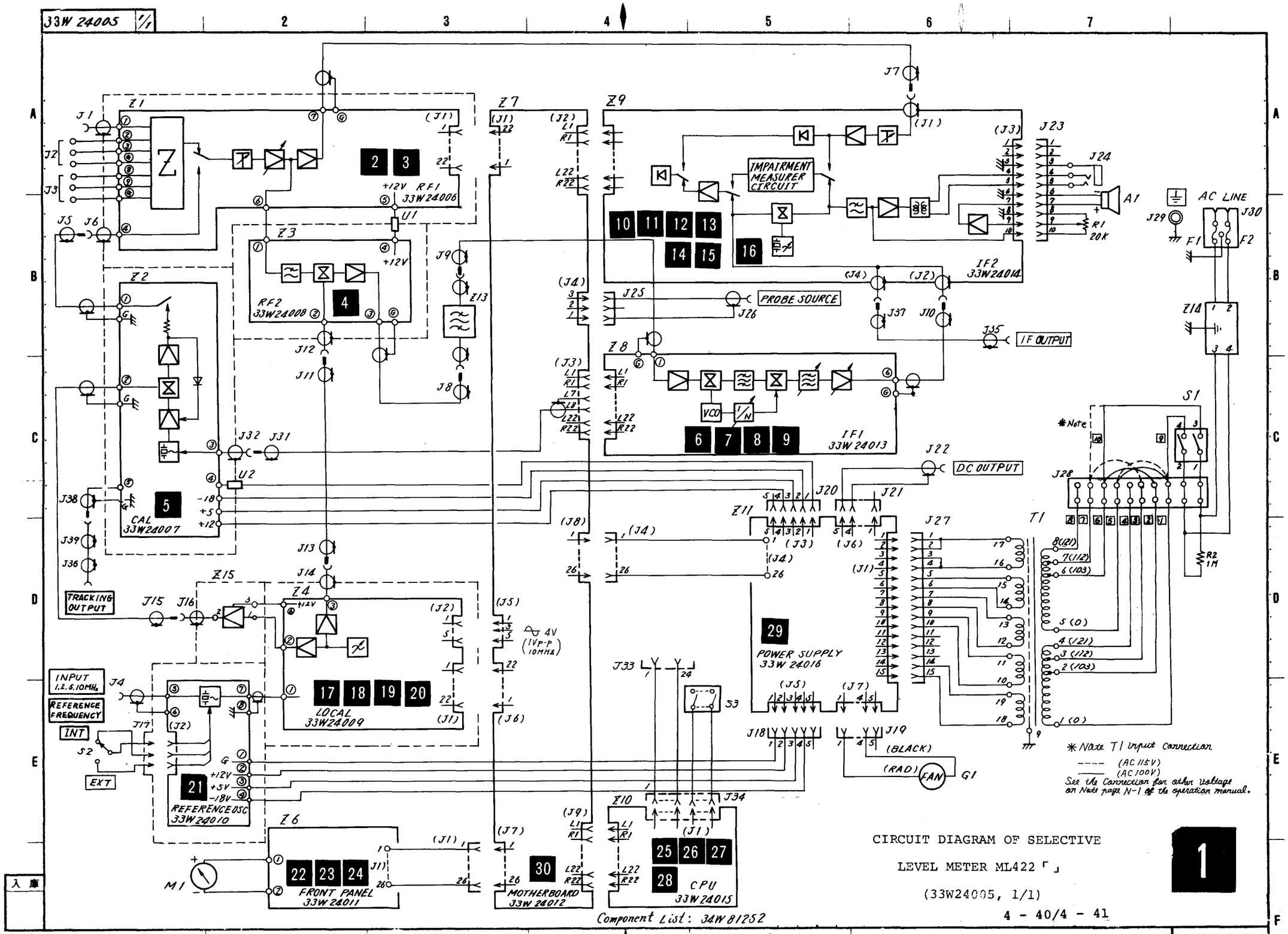
33W 24005 1/1
IMPAIRMENT MEASURER CIRCUIT
PROBE SOURCE
IF OUTPUT
DC OUTPUT
TRACKING OUTPUT
INPUT 1.2.5.10MHz
REFERENCE FREQUENCY
INT
EXT
AC LINE
CAL 33W24007
RF1 33W24006
RF2 33W24008
IF1 33W24013
IF2 33W24014
LOCAL 33W24009
REFERENCE OSC 33W24010
FRONT PANEL 33W24011
MOTHERBOARD 33W24012
CPU 33W24015
POWER SUPPLY 33W24016
VCO
FAN
*Note T1 input connection
(AC 115V)
(AC 100V)
See the Connection for other voltage on Note page N-1 of the operation manual.
Component List: 34W81252
CIRCUIT DIAGRAM OF SELECTIVE
LEVEL METER ML422「」
(33W24005, 1/1)
4 - 40/4 - 41
1
入庫
No.153 A3 5.000

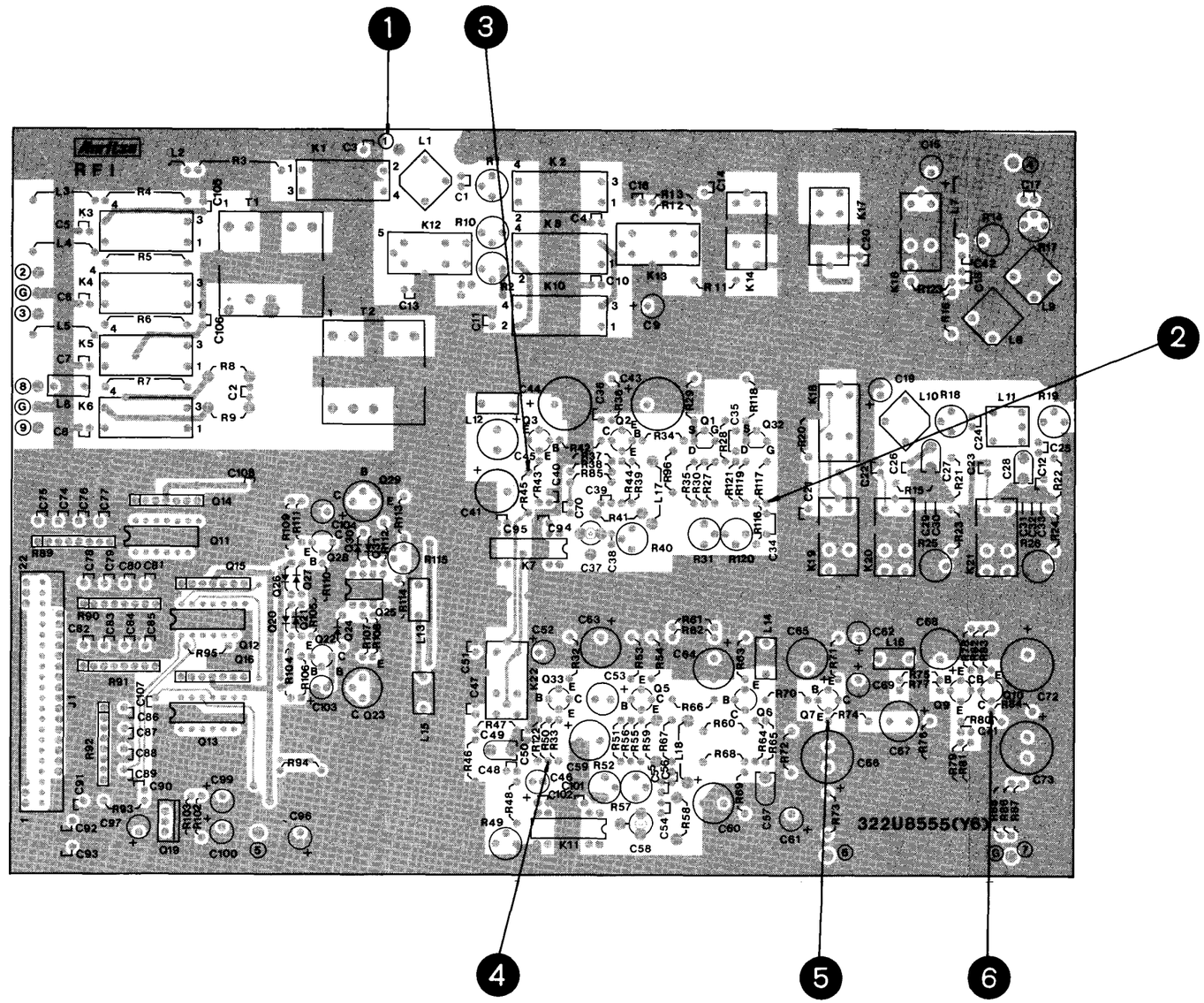

RF1 Printed Circuit Board

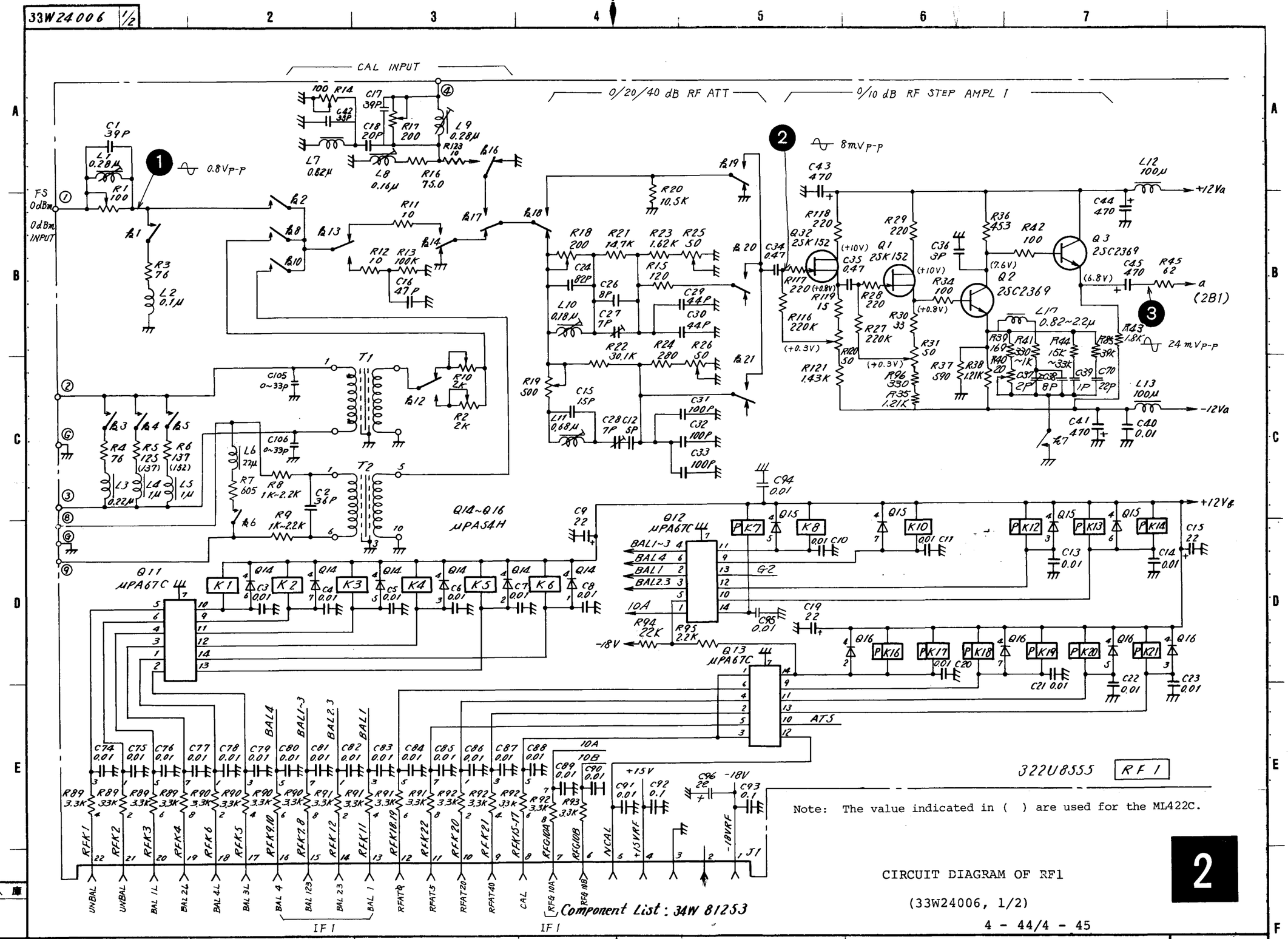

Note: The value indicated in ( ) are used for the ML422C.

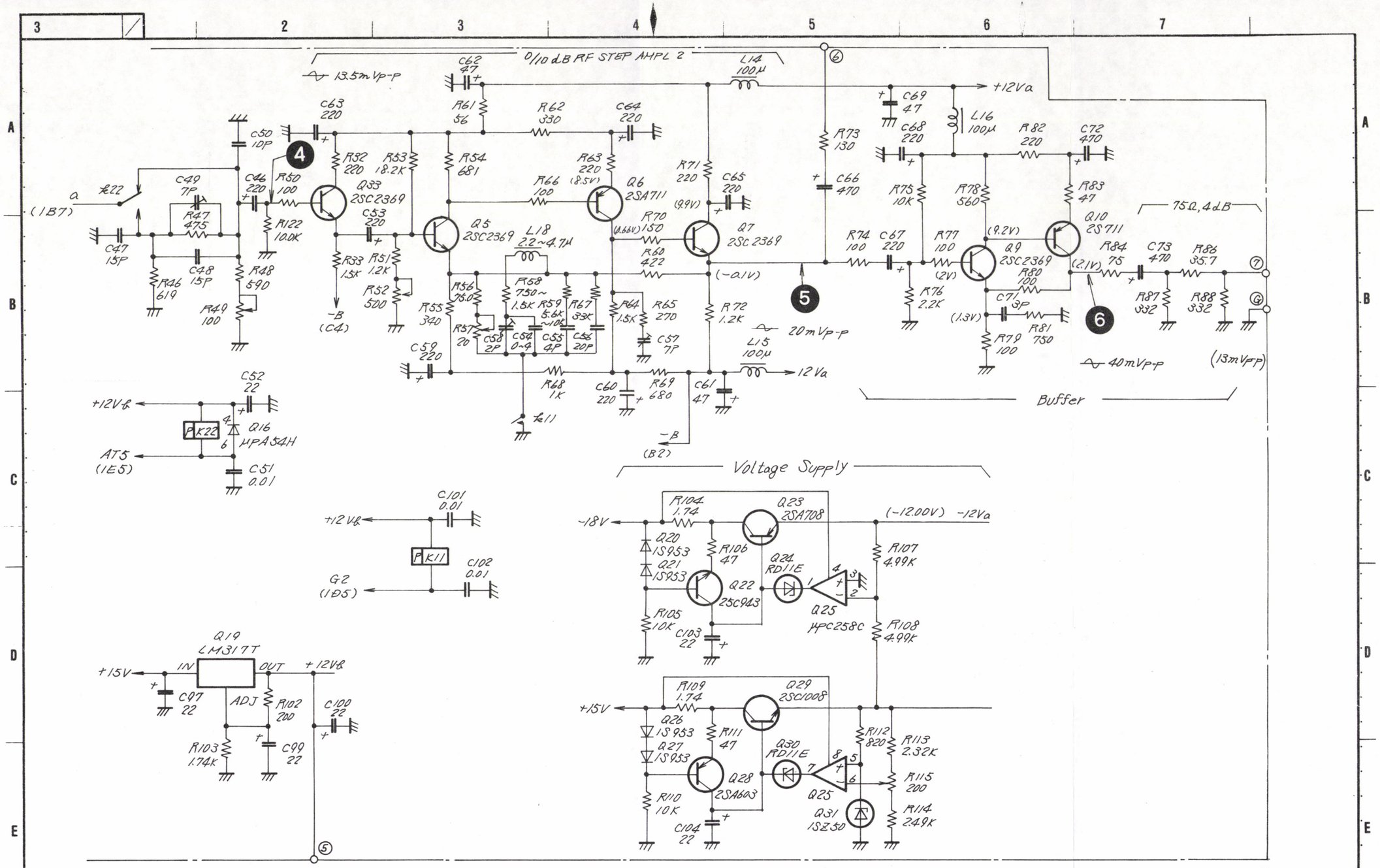

CIRCUIT DIAGRAM OF RF1

(33W24006, 2/2)

4 - 46/4 - 47

3

入庫

No.153 A3 5.000

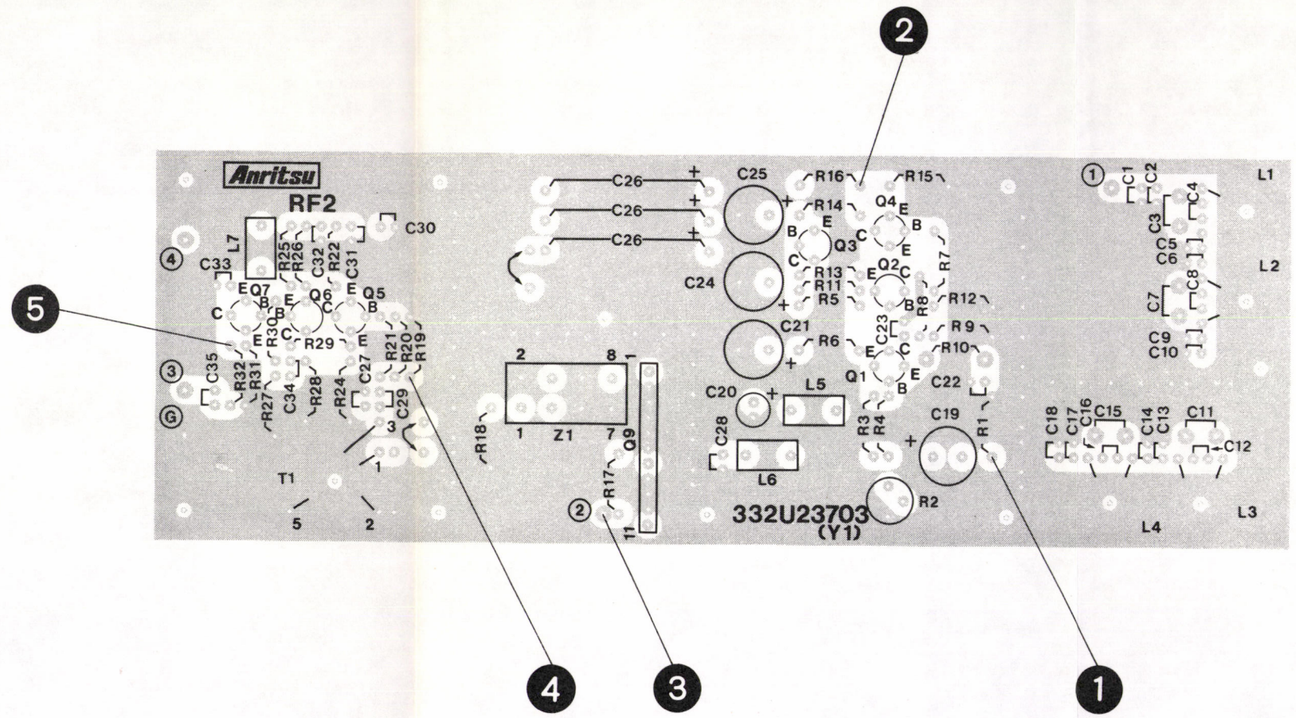

RF 2 Printed Circuit Board

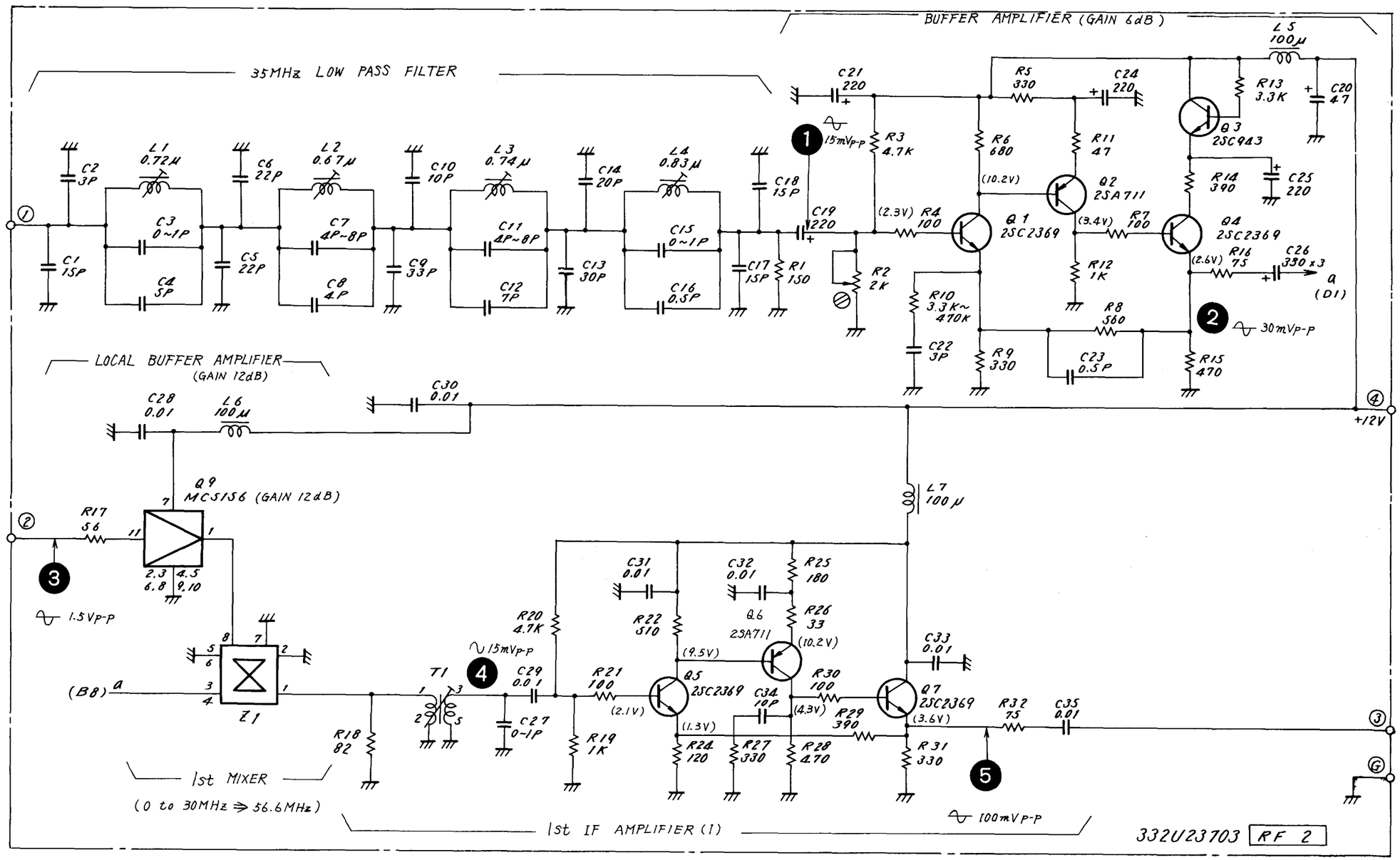

Component List : 34W 81254

CIRCUIT DIAGRAM OF RF2

(33W24008, 1/1)

4

入庫

No.153 A3 5.000

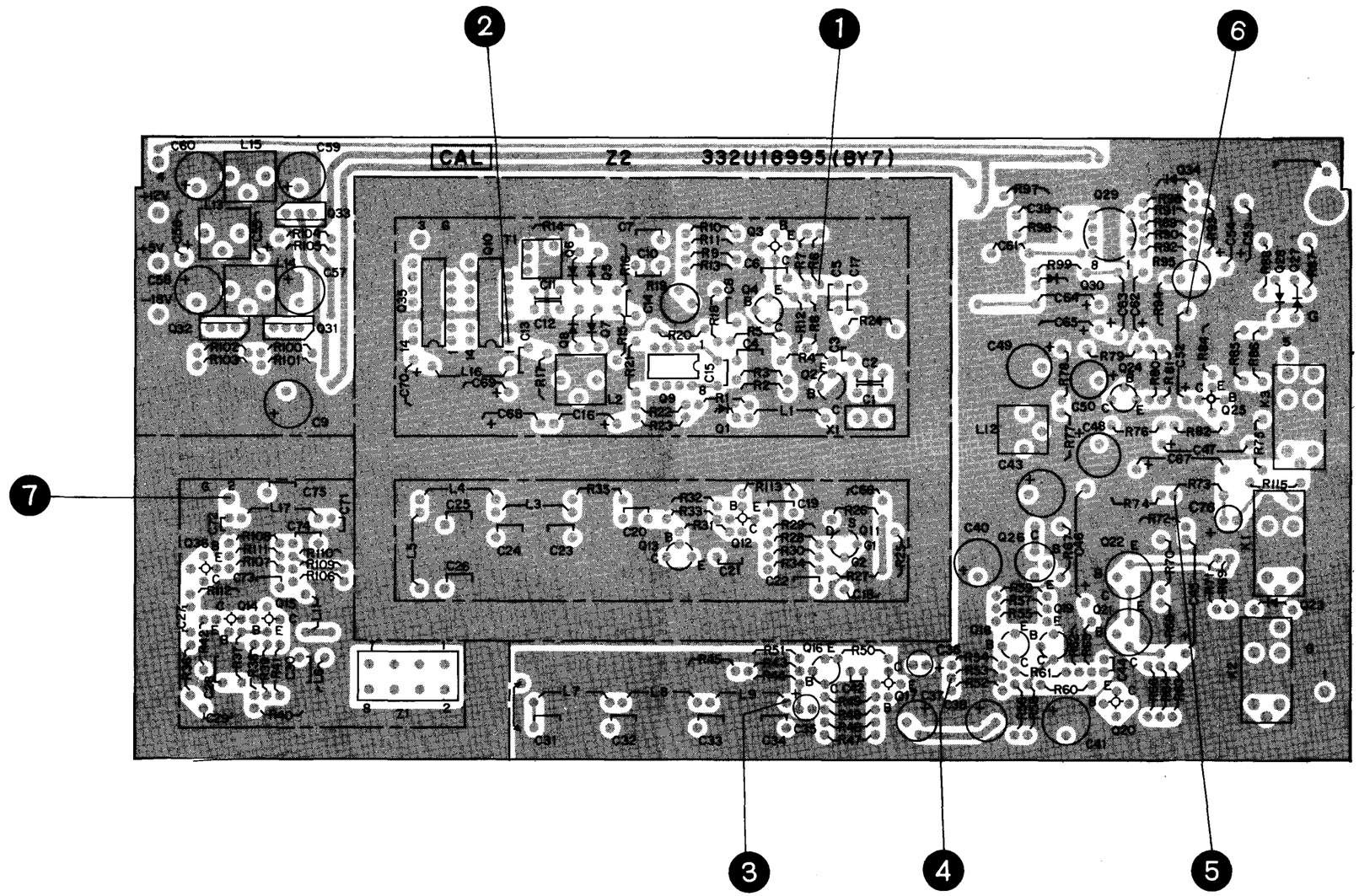

CAL Printed Circuit Board

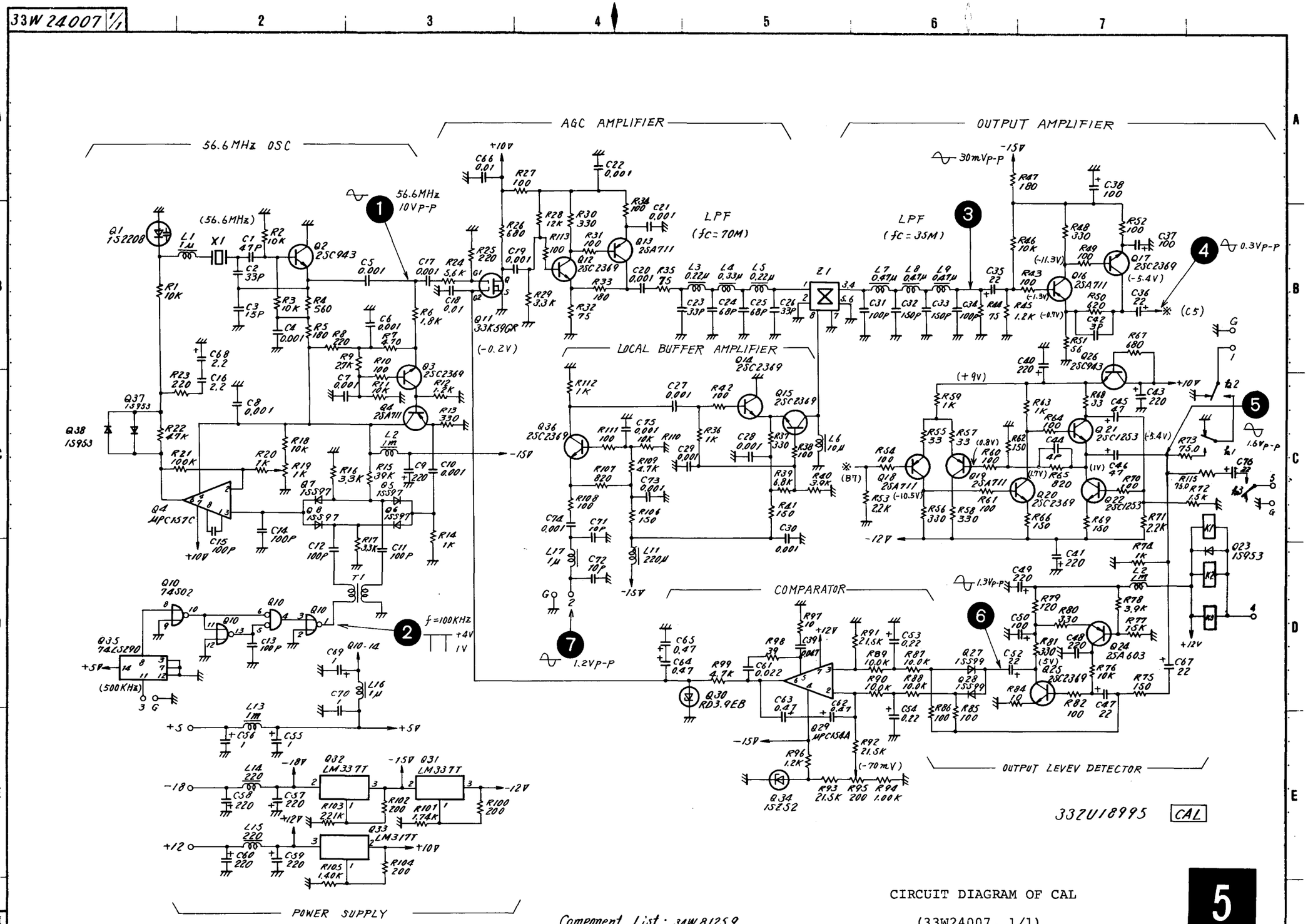
33W24007 1/1
56.6MHz OSC
AGC AMPLIFIER
OUTPUT AMPLIFIER
LPF (fc=70M)
LPF (fc=35M)
LOCAL BUFFER AMPLIFIER
COMPARATOR
OUTPUT LEVEV DETECTOR
POWER SUPPLY
56.6MHz 10VP-P
30mVP-P
0.3VP-P
1.6VP-P
1.2VP-P
1.3VP-P
f=100KHz
332U18995
CAL
Component List : 34W81259
CIRCUIT DIAGRAM OF CAL
(33W24007, 1/1)
4 - 54/4 - 55
5

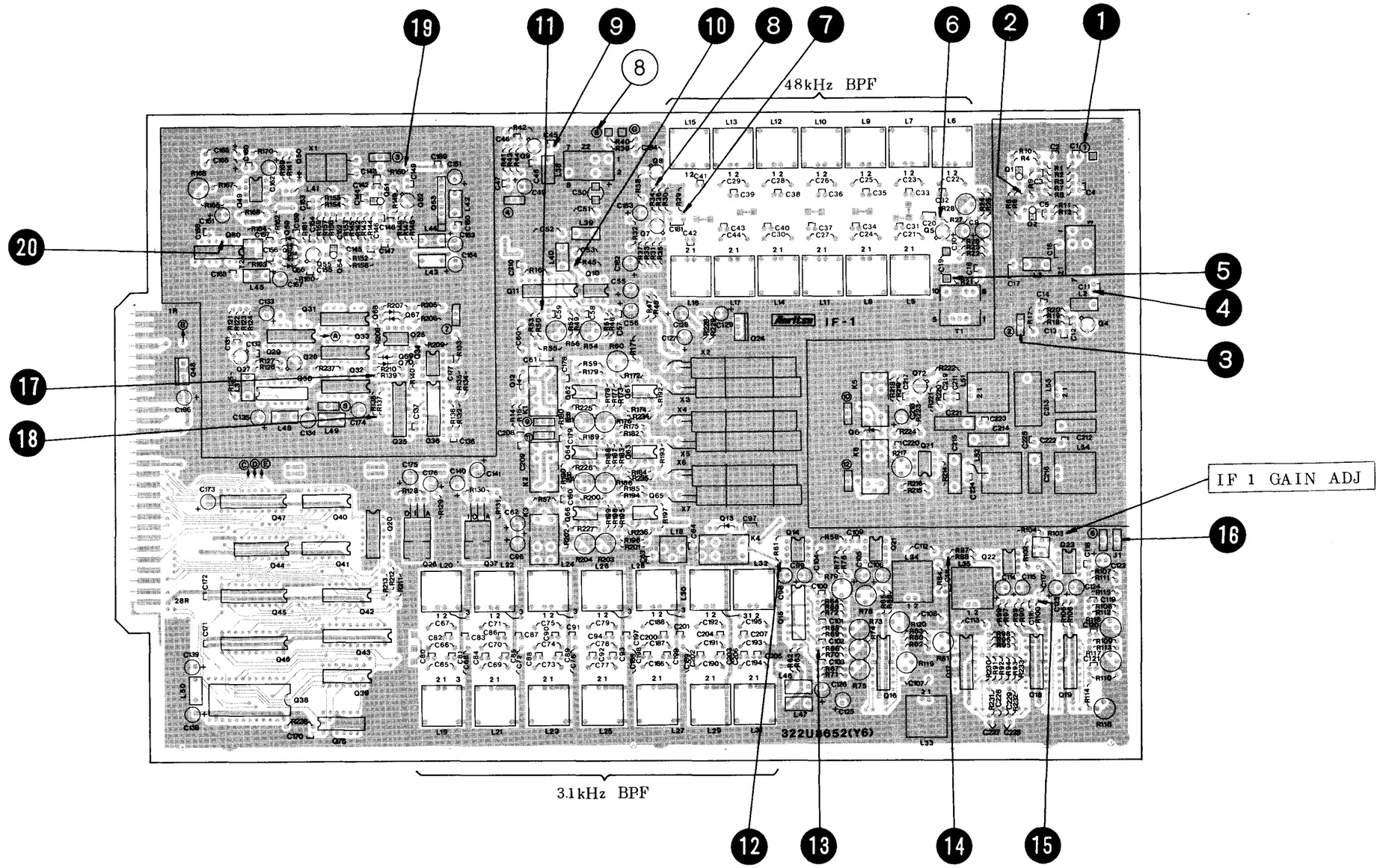

IF 1 Printed Circuit Board

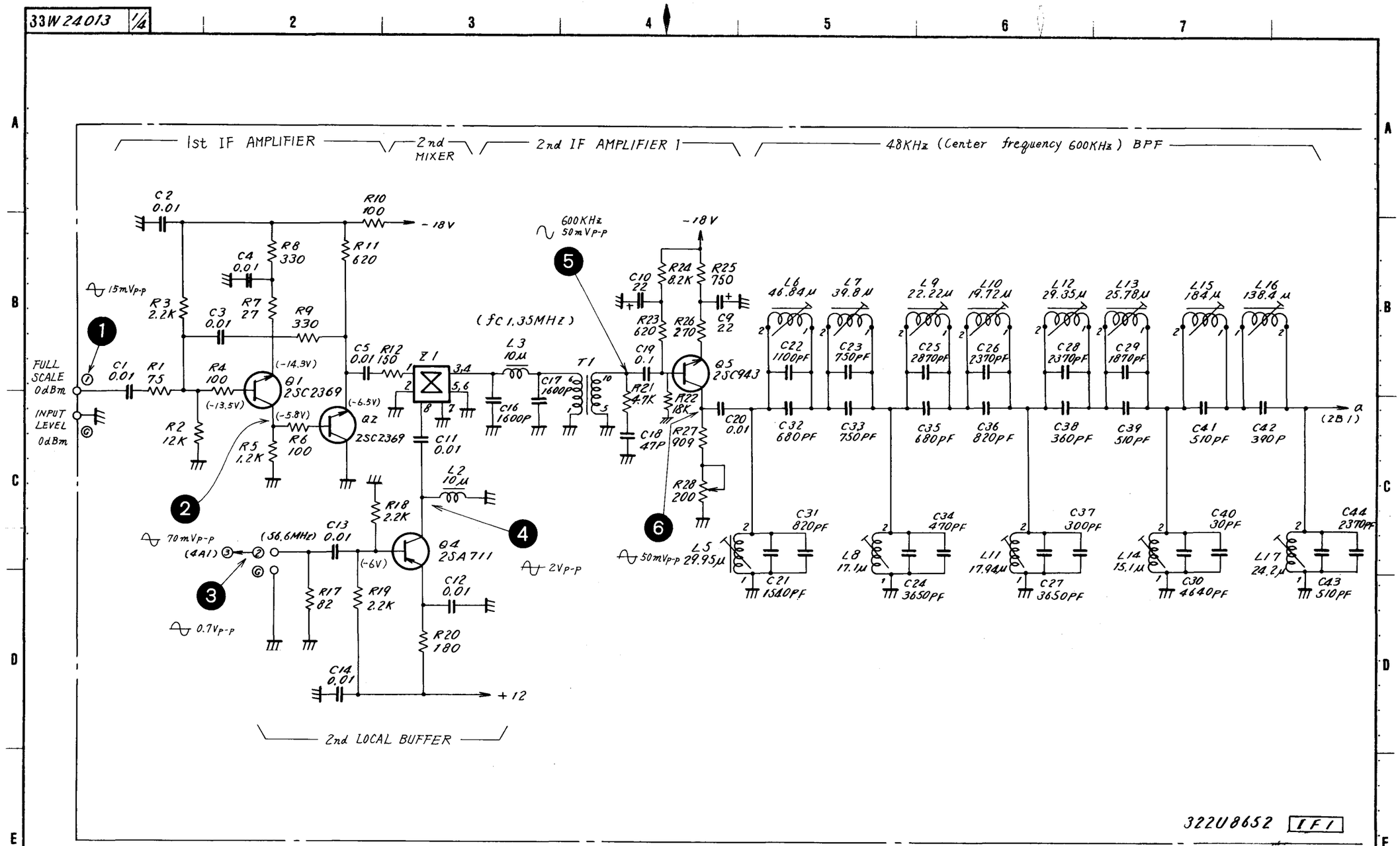

Component List : 34W81255

CIRCUIT DIAGRAM OF IF 1

(33W24013, 1/4)

6

入庫

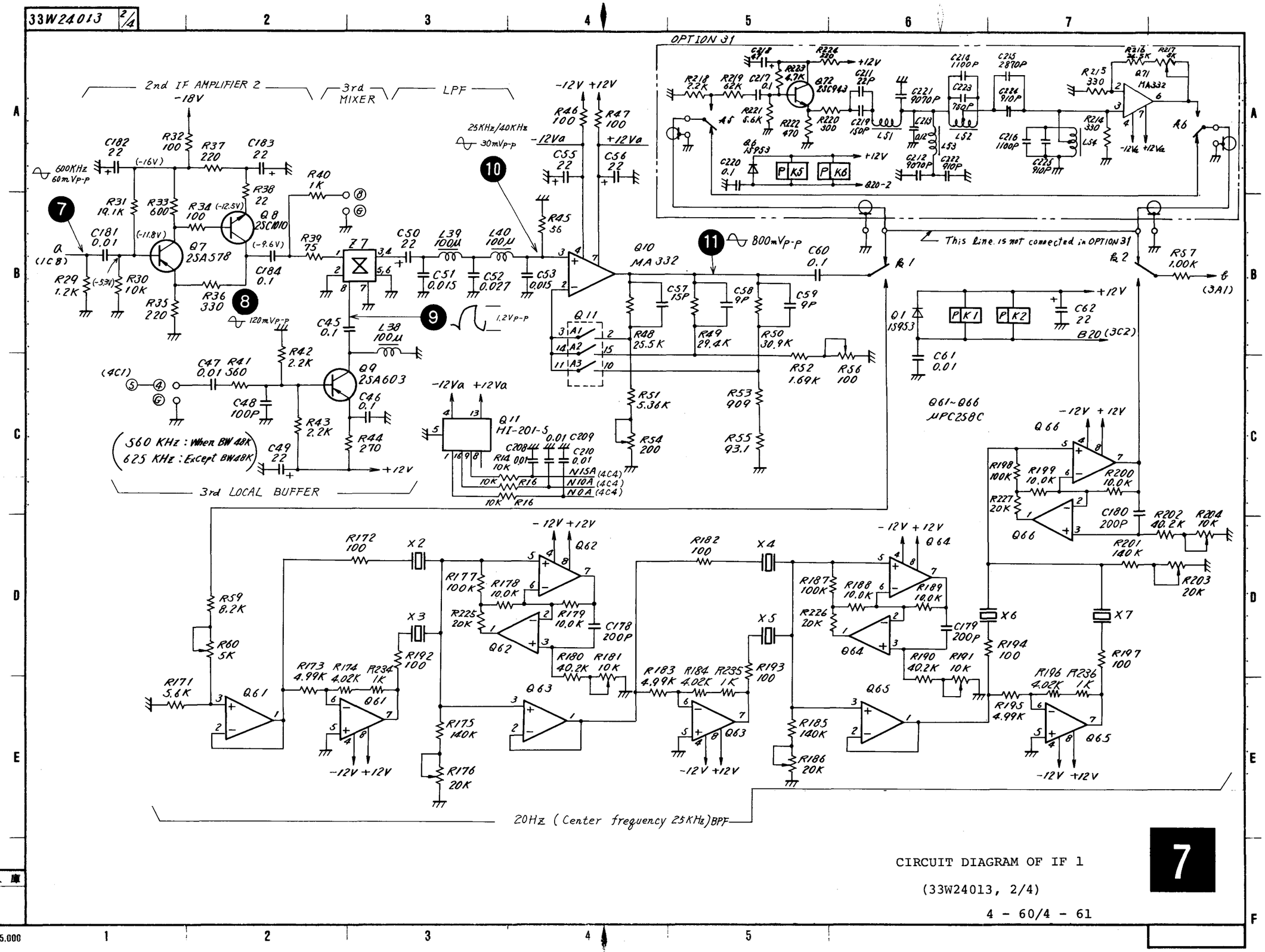

CIRCUIT DIAGRAM OF IF 1

(33W24013, 2/4)

4 - 60/4 - 61

7

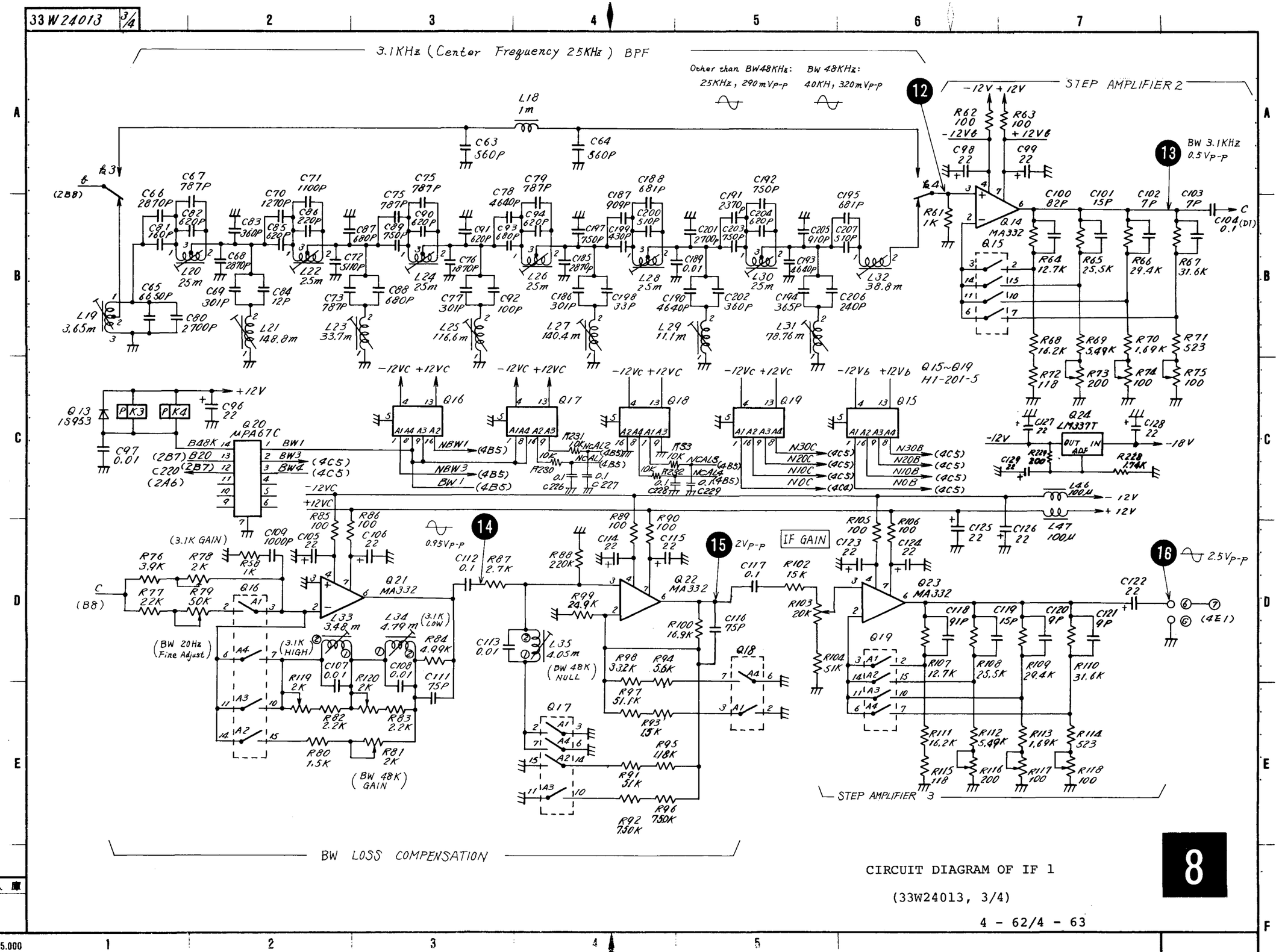

CIRCUIT DIAGRAM OF IF 1

(33W24013, 3/4)

入庫

No.153 A3 5.000

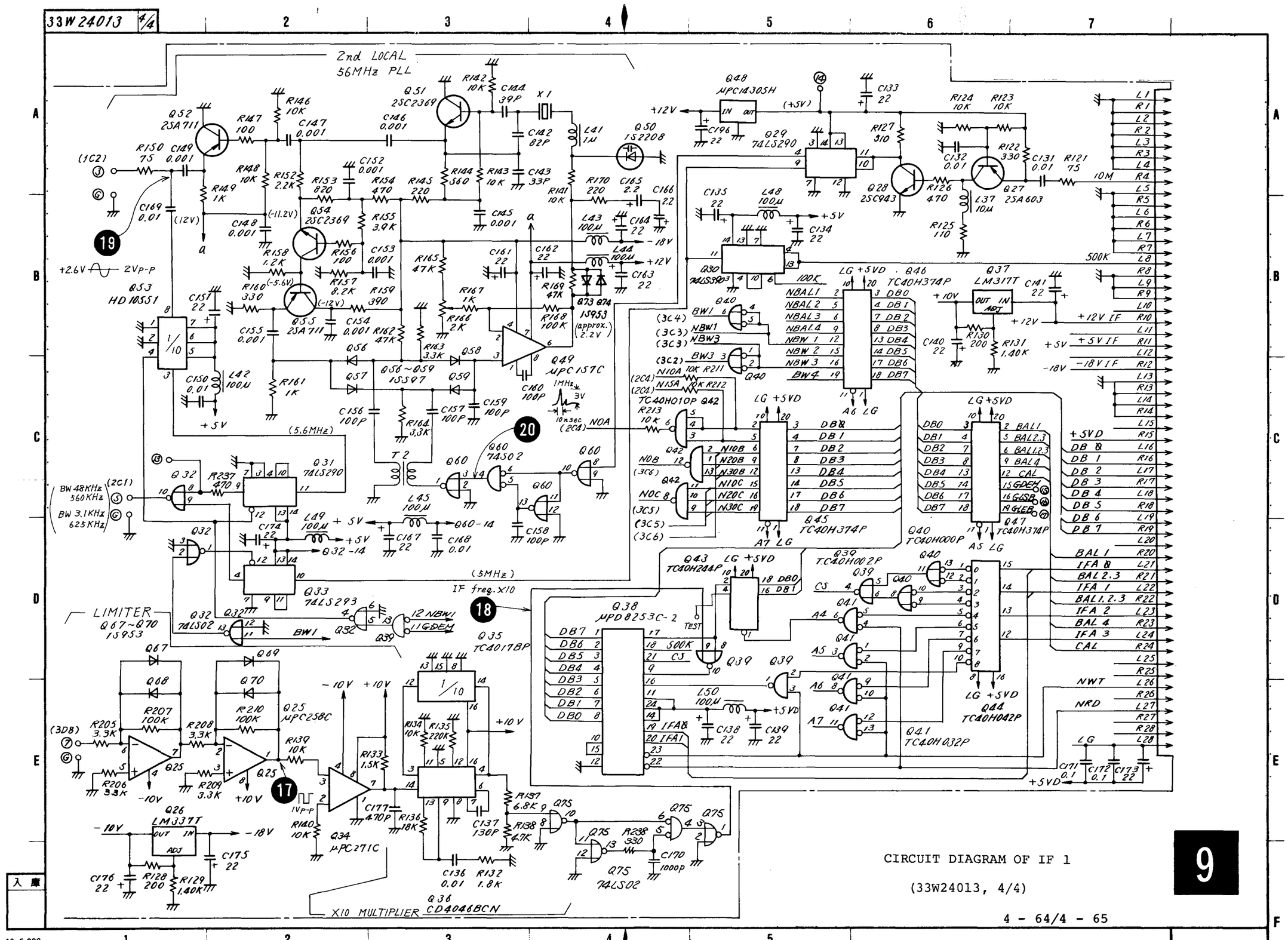
33W24013 4/4
2nd LOCAL
56MHz PLL
Q51 2SC2369
Q52 2SA711
Q53 HD10551
Q54 2SC2369
Q55 2SA711
Q56 ~ Q59 1SS97
Q48 μPC1430SH
Q29 74LS290
Q28 2SC943
Q27 2SA603
Q37 LM317T
Q46 TC40H374P
Q45 TC40H374P
Q47 TC40H374P
Q40 TC40H000P
Q44 TC40H042P
Q41 TC40H032P
Q39 TC40H002P
Q43 TC40H244P
Q38 μPD8253C-2
Q35 TC4017BP
Q36 CD4046BCN
Q49 μPC157C
Q60 74S02
Q31 74LS290
Q32 74LS02
Q33 74LS293
Q25 μPC258C
Q34 μPC271C
Q26 LM337T
Q75 74LS02
LIMITER
Q67~Q70 1S953
X10 MULTIPLIER
IF freq. X10
CIRCUIT DIAGRAM OF IF 1
(33W24013, 4/4)
9
4 - 64/4 - 65
No.153 A3 5.000

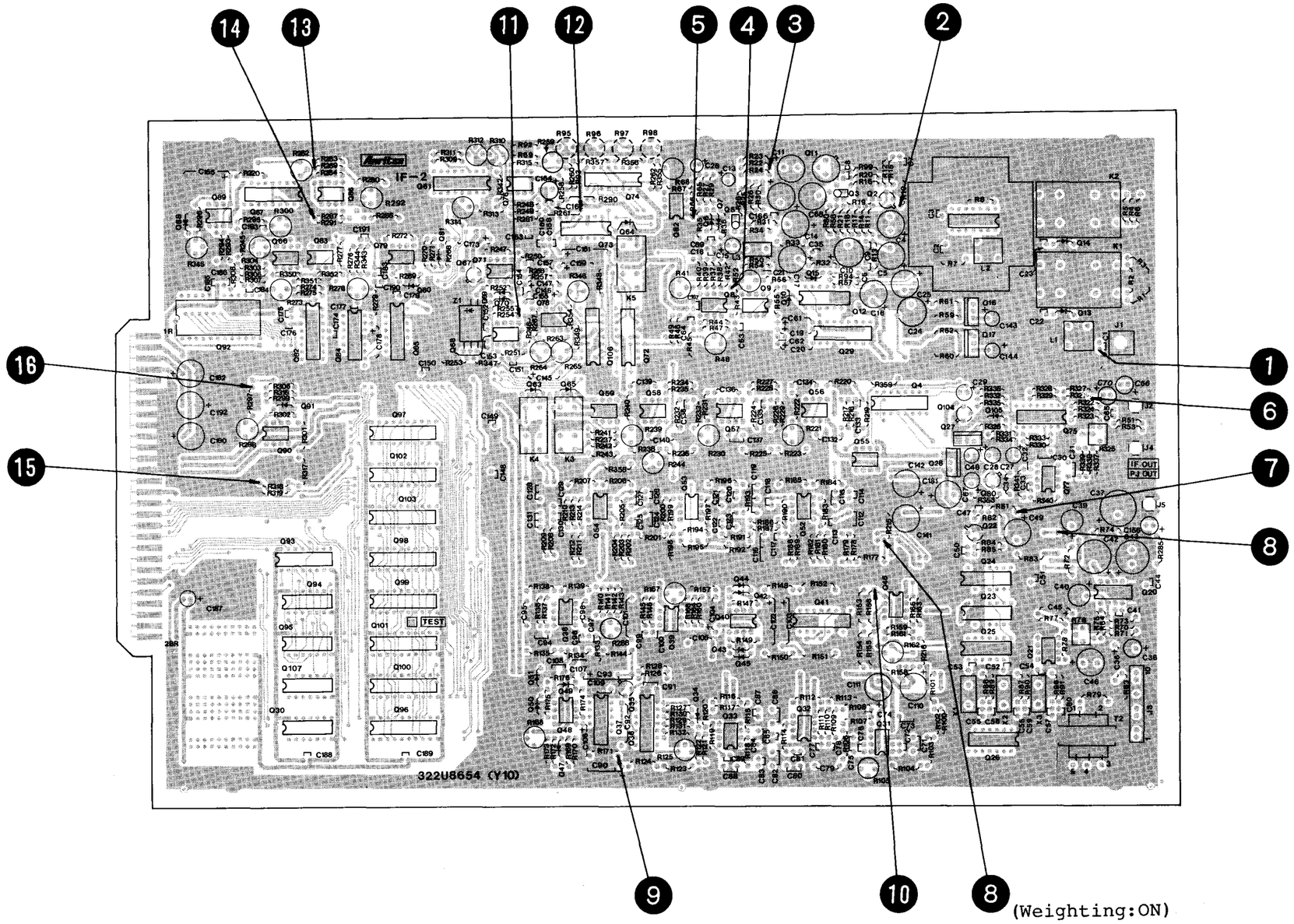

IF 2 Printed Circuit Board

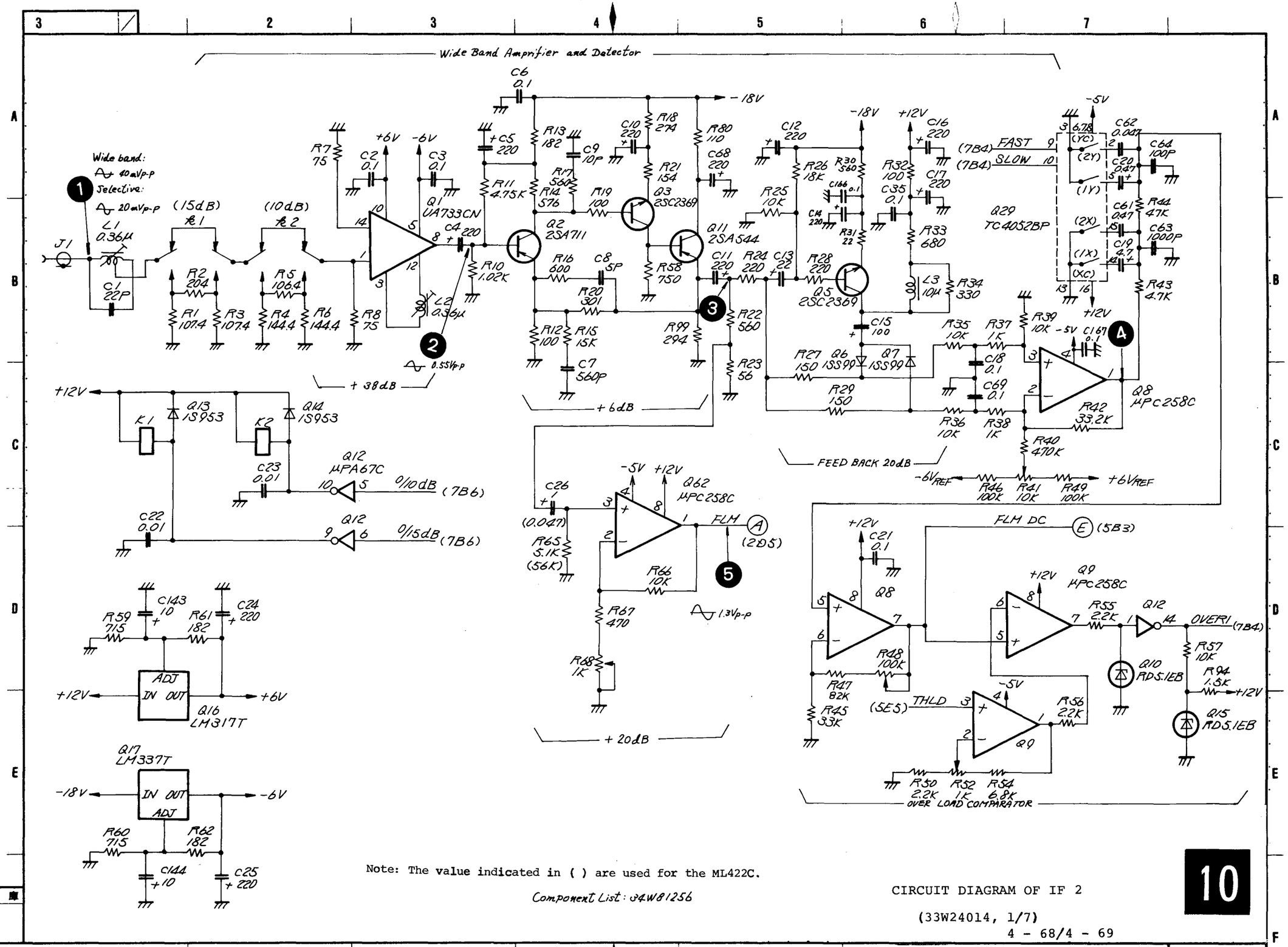

Note: The value indicated in ( ) are used for the ML422C.

Component List: 34W81256

CIRCUIT DIAGRAM OF IF 2

(33W24014, 1/7)

4 - 68/4 - 69

10

入庫

No.153 A3 5.000

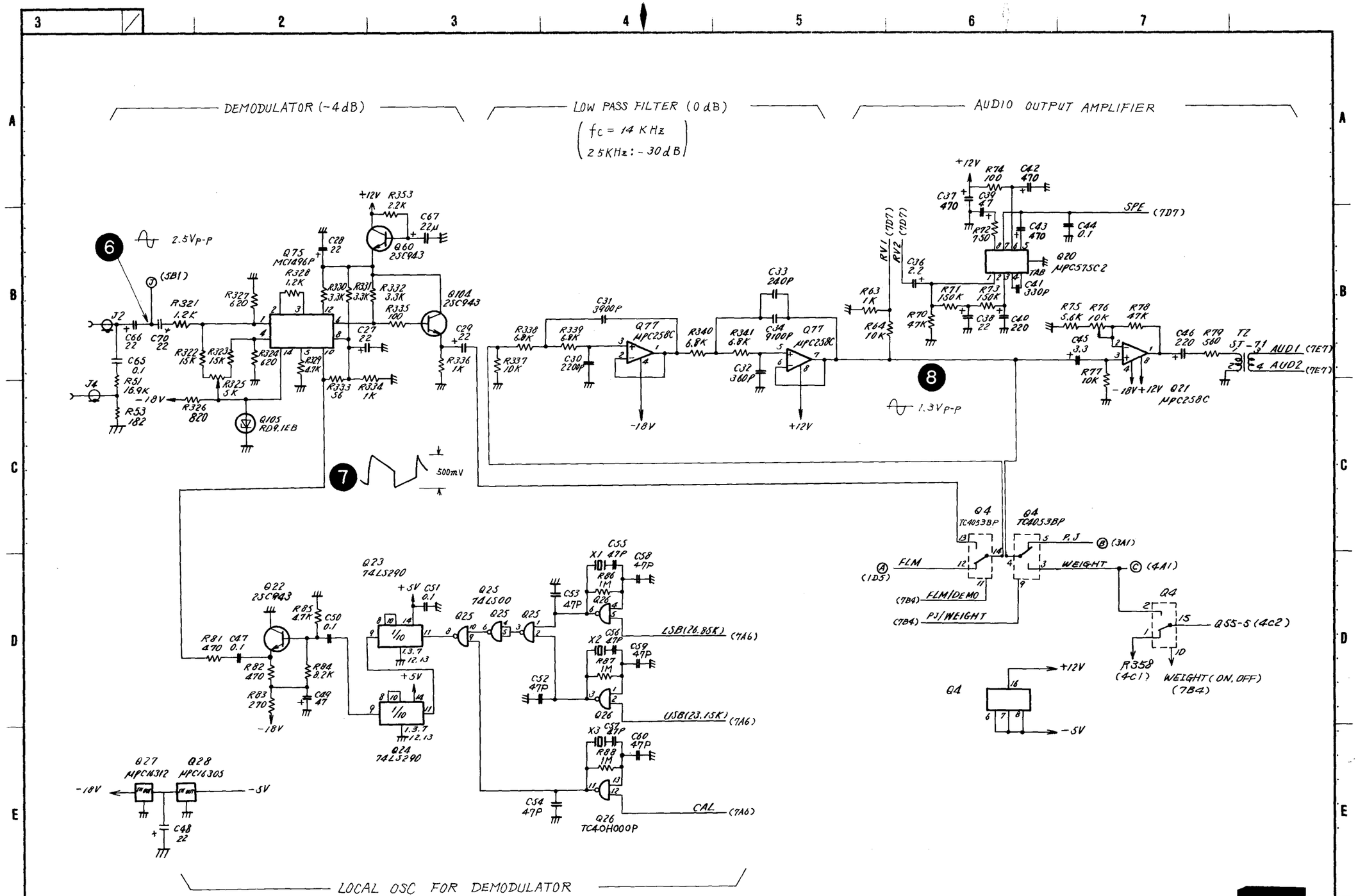

CIRCUIT DIAGRAM OF IF 2

(33W24014, 2/7)

4 - 70/4 - 71

11

No.153 A3 5.000

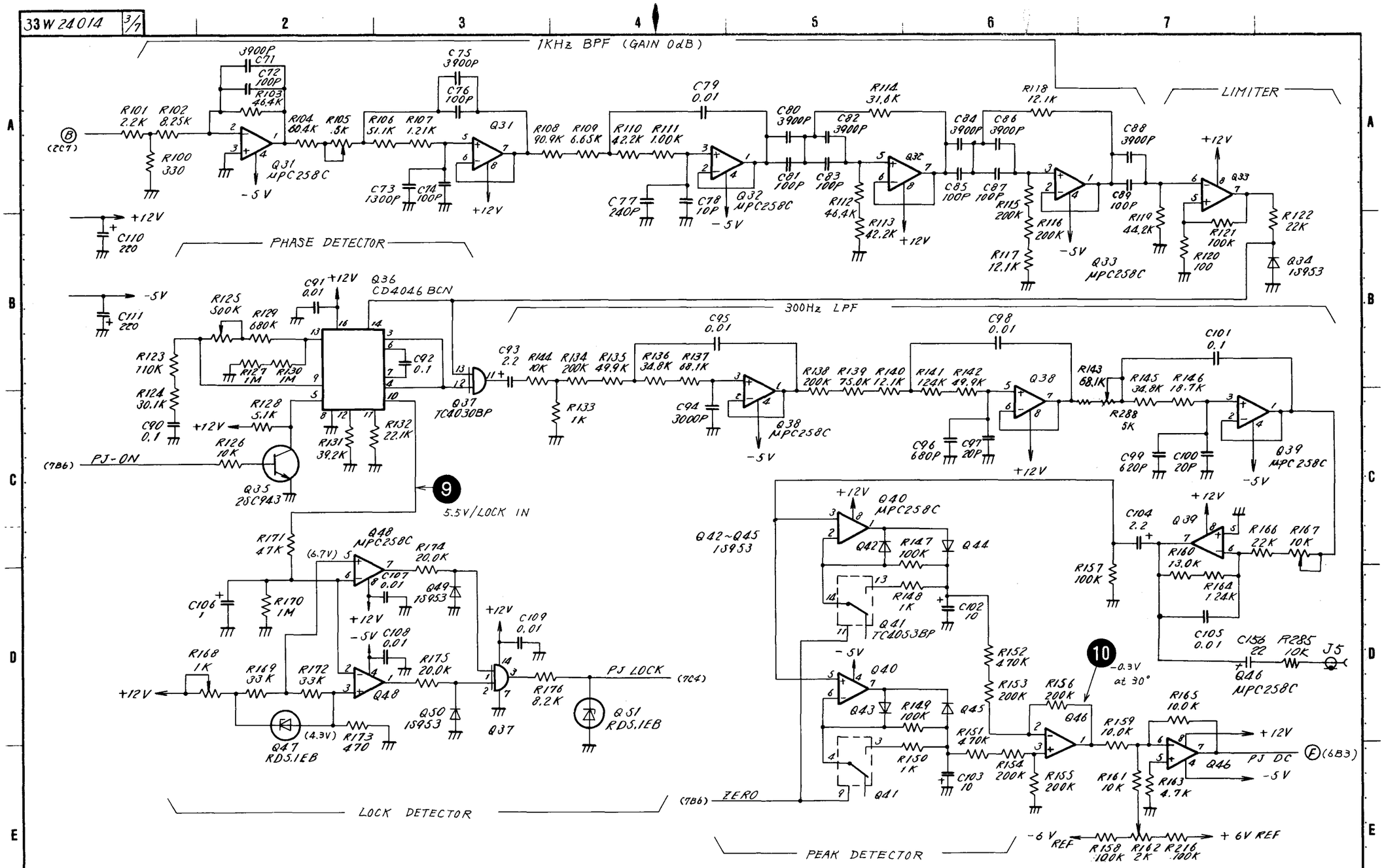

CIRCUIT DIAGRAM OF IF 2

(33W24014, 3/7)

入庫

No.153 A3 5.000

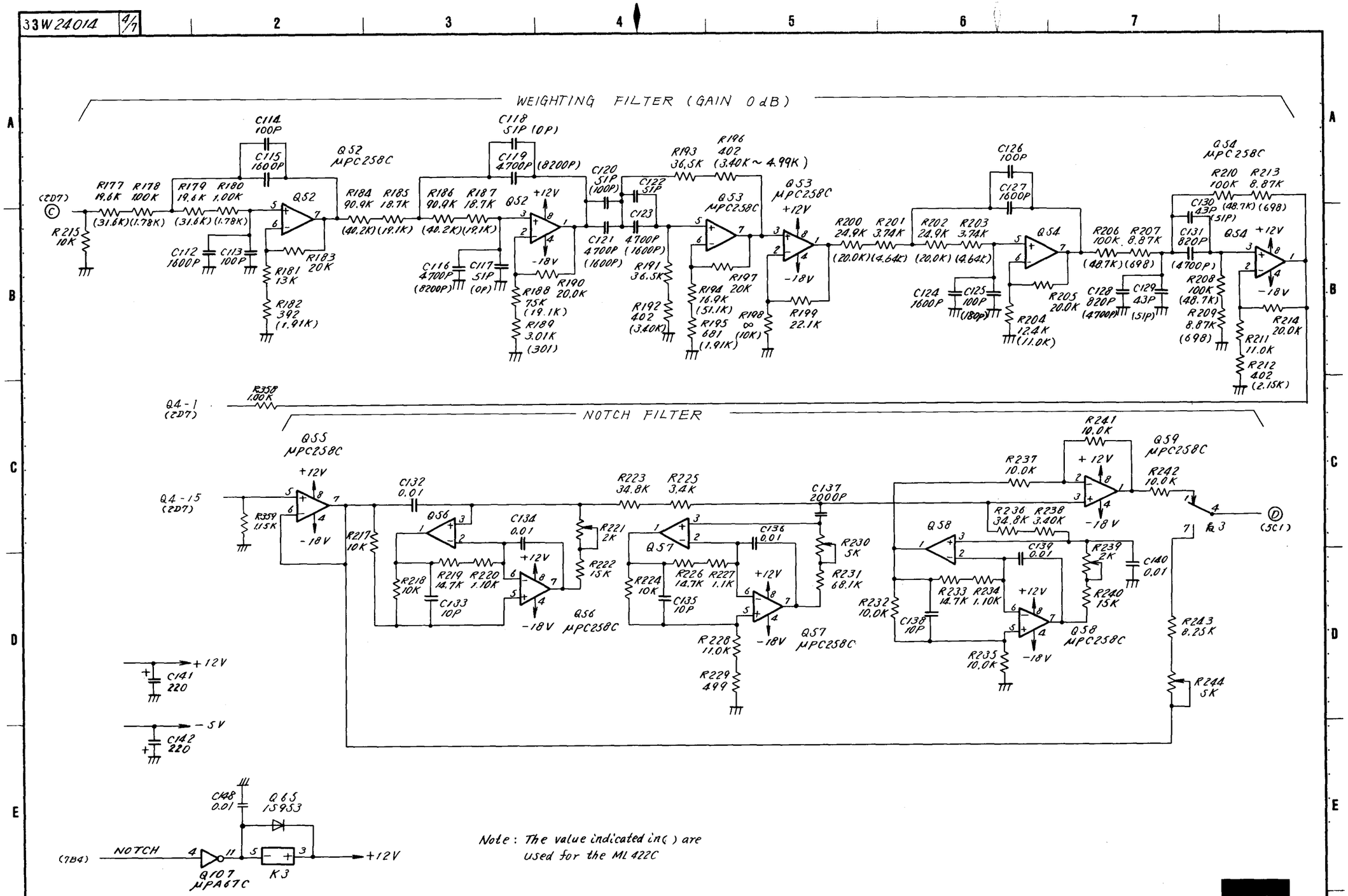

CIRCUIT DIAGRAM OF IF 2

(33W24014, 4/7)

4 - 74/4 - 75

入庫

No.153 A3 5.000

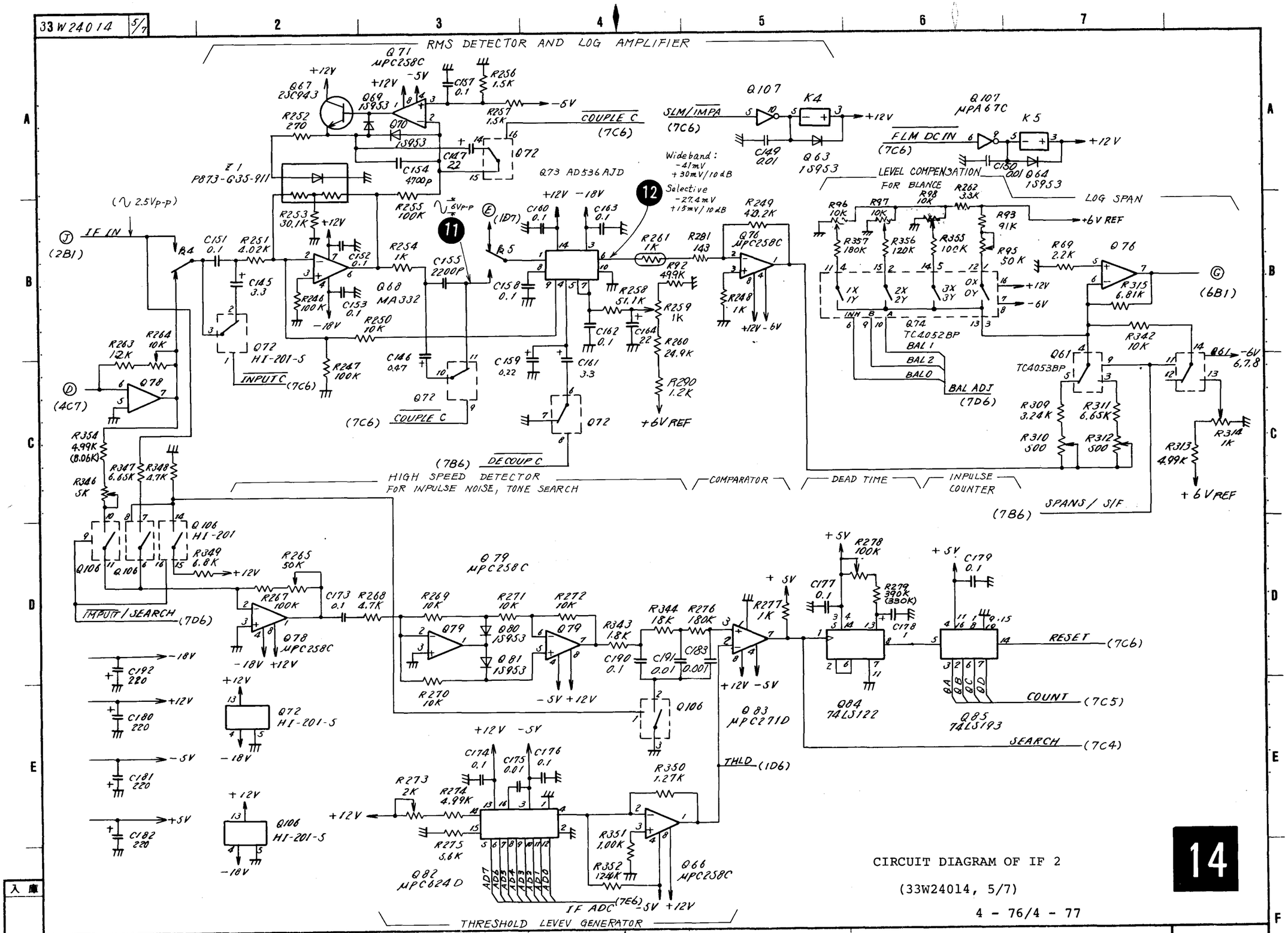

CIRCUIT DIAGRAM OF IF 2

(33W24014, 5/7)

4 - 76/4 - 77

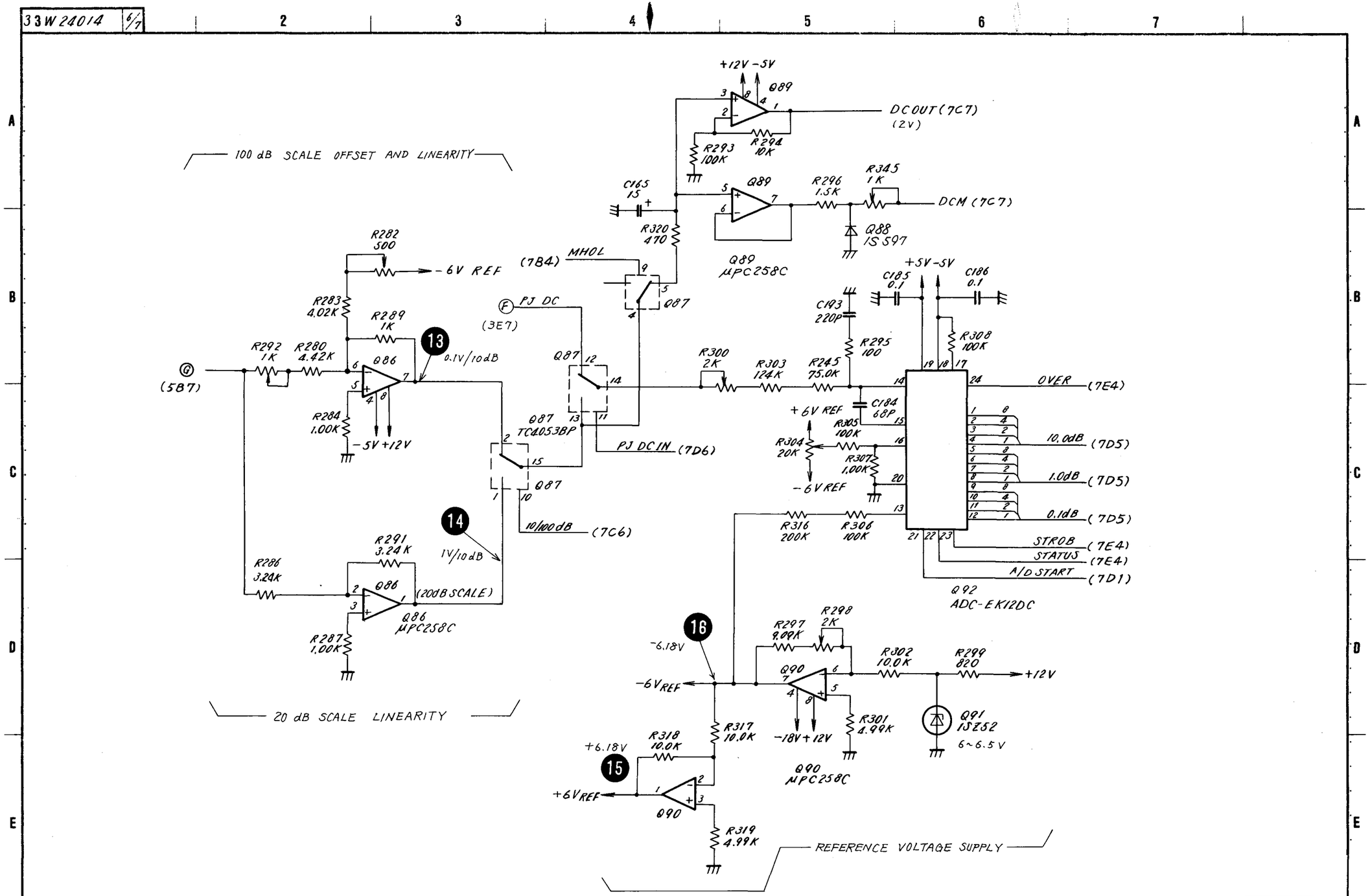

CIRCUIT DIAGRAM OF IF 2

(33W24014, 6/7)

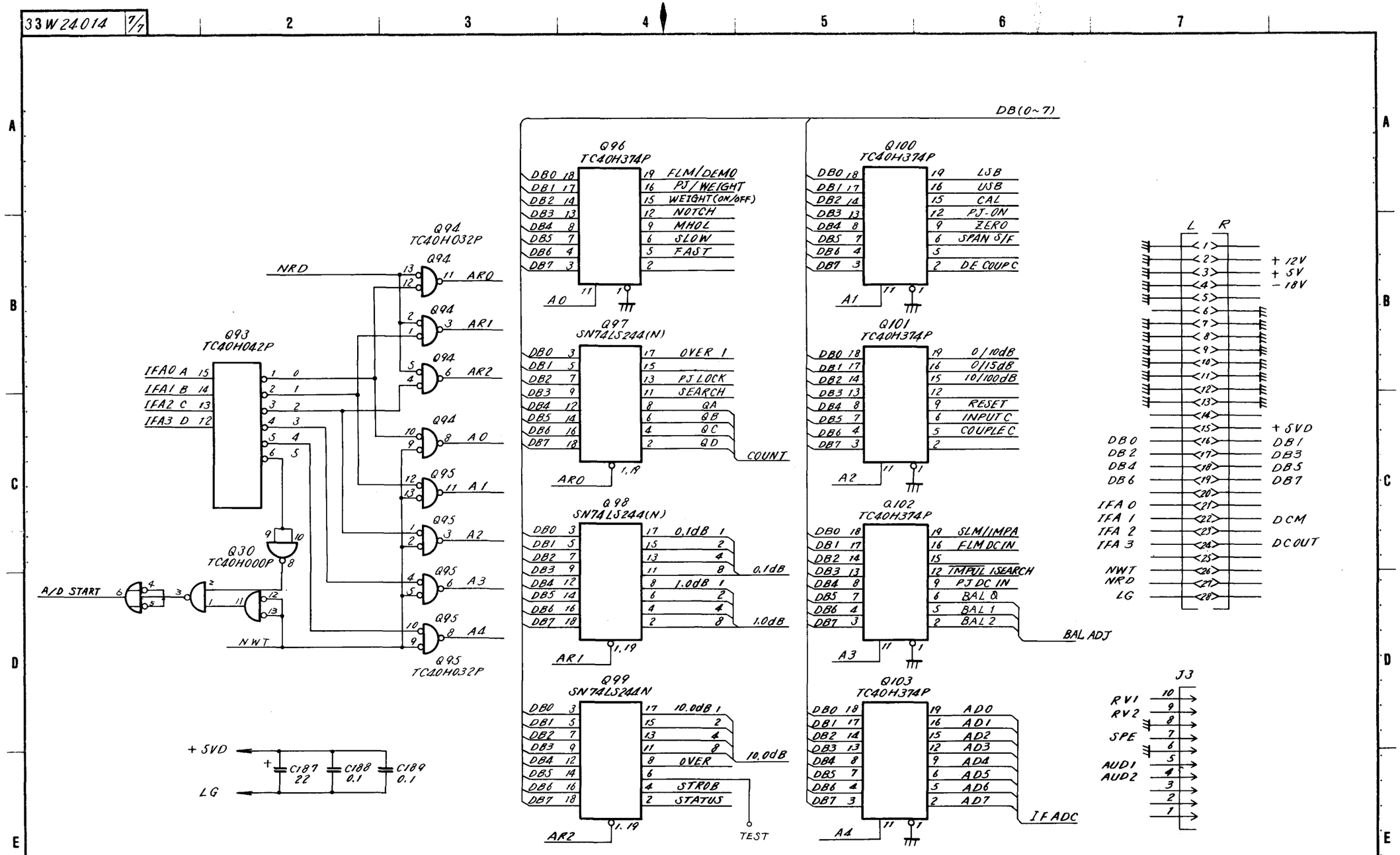

CIRCUIT DIAGRAM OF IF 2

(33W24014, 7/7)

4 - 80/4 - 81

16

入庫

No.153 A3 5.000

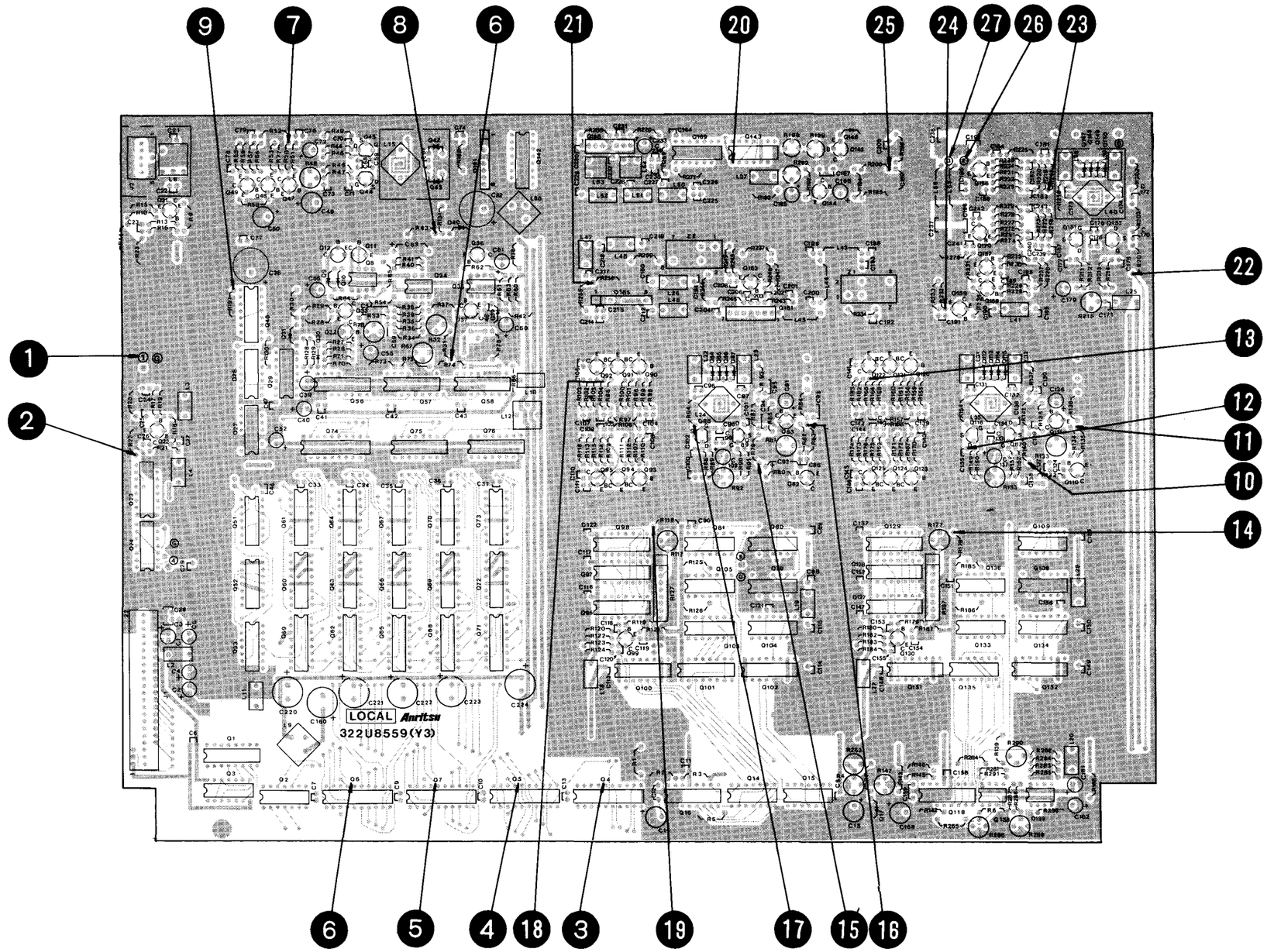

LOCAL Printed Circuit Board

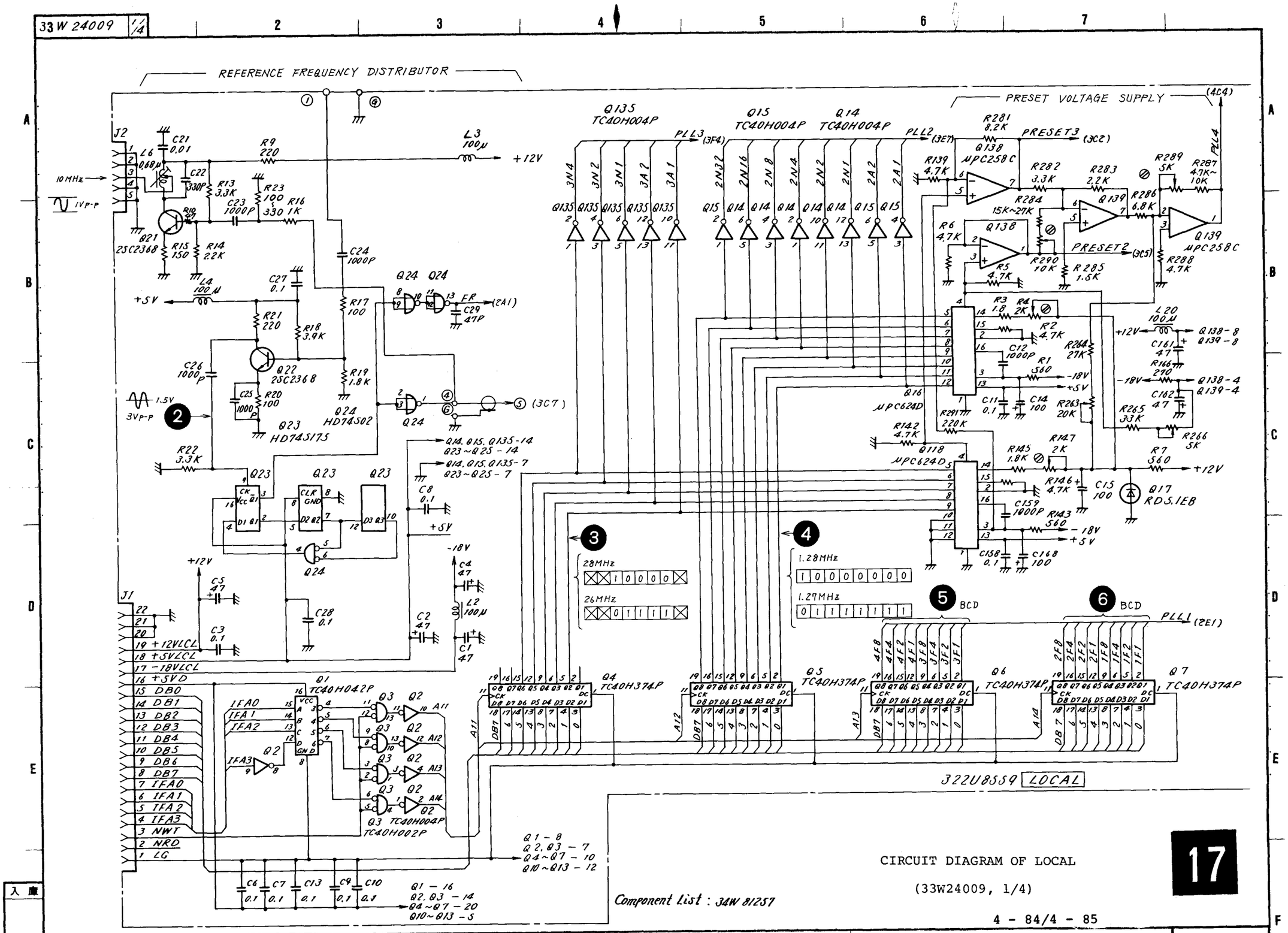
33W 24009 1/4
REFERENCE FREQUENCY DISTRIBUTOR
PRESET VOLTAGE SUPPLY
Q135 TC40H004P
Q15 TC40H004P
Q14 TC40H004P
PLL3 (3F4)
PLL2 (3E7)
PRESET3 (3C2)
PRESET2 (3C5)
PLL4
PLL1 (2E1)
+12V
+5V
-18V
10MHz
1VP-P
1.5V
3VP-P
FR (2A1)
(3C7)
Q21 2SC2368
Q22 2SC2368
Q23 HD74S175
Q24 HD74S02
Q16 μPC624D
Q118 μPC624D
Q17 RDS.1EB
Q138 μPC258C
Q139 μPC258C
28MHz
26MHz
1.28MHz
1.27MHz
BCD
Q1 TC40H042P
Q3 TC40H004P
TC40H002P
Q4 TC40H374P
Q5 TC40H374P
Q6 TC40H374P
Q7 TC40H374P
322U8S59 LOCAL
Q1 - 8
Q2, Q3 - 7
Q4~Q7 - 10
Q10~Q13 - 12
Q1 - 16
Q2, Q3 - 14
Q4~Q7 - 20
Q10~Q13 - 5
Component List : 34W 81257
CIRCUIT DIAGRAM OF LOCAL
(33W24009, 1/4)
4 - 84/4 - 85
17
入庫
No.153 A3 5.000

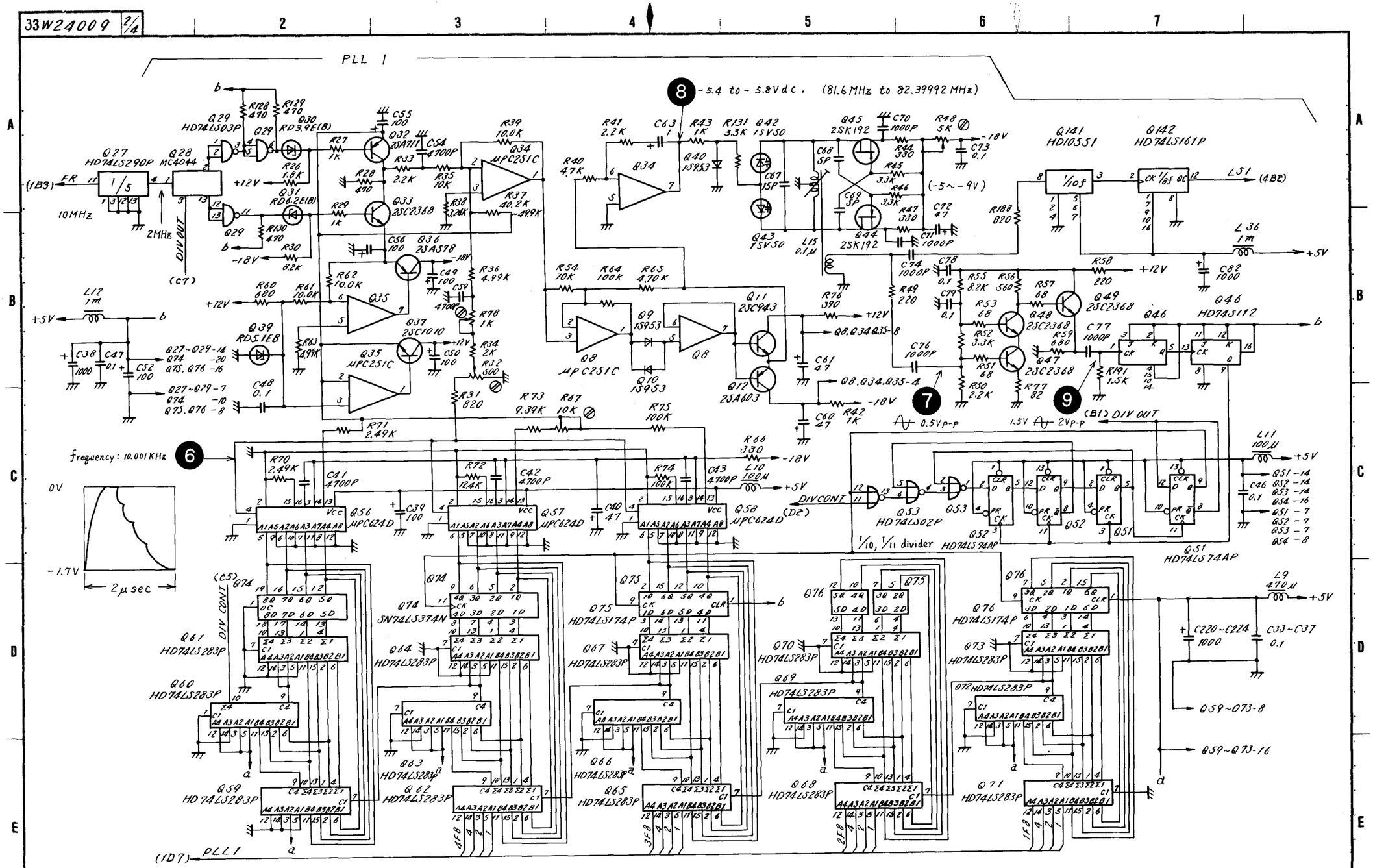

CIRCUIT DIAGRAM OF LOCAL

(33W24009, 2/4)

18

4 - 86/4 - 87

入庫

No.153 A3 5.000

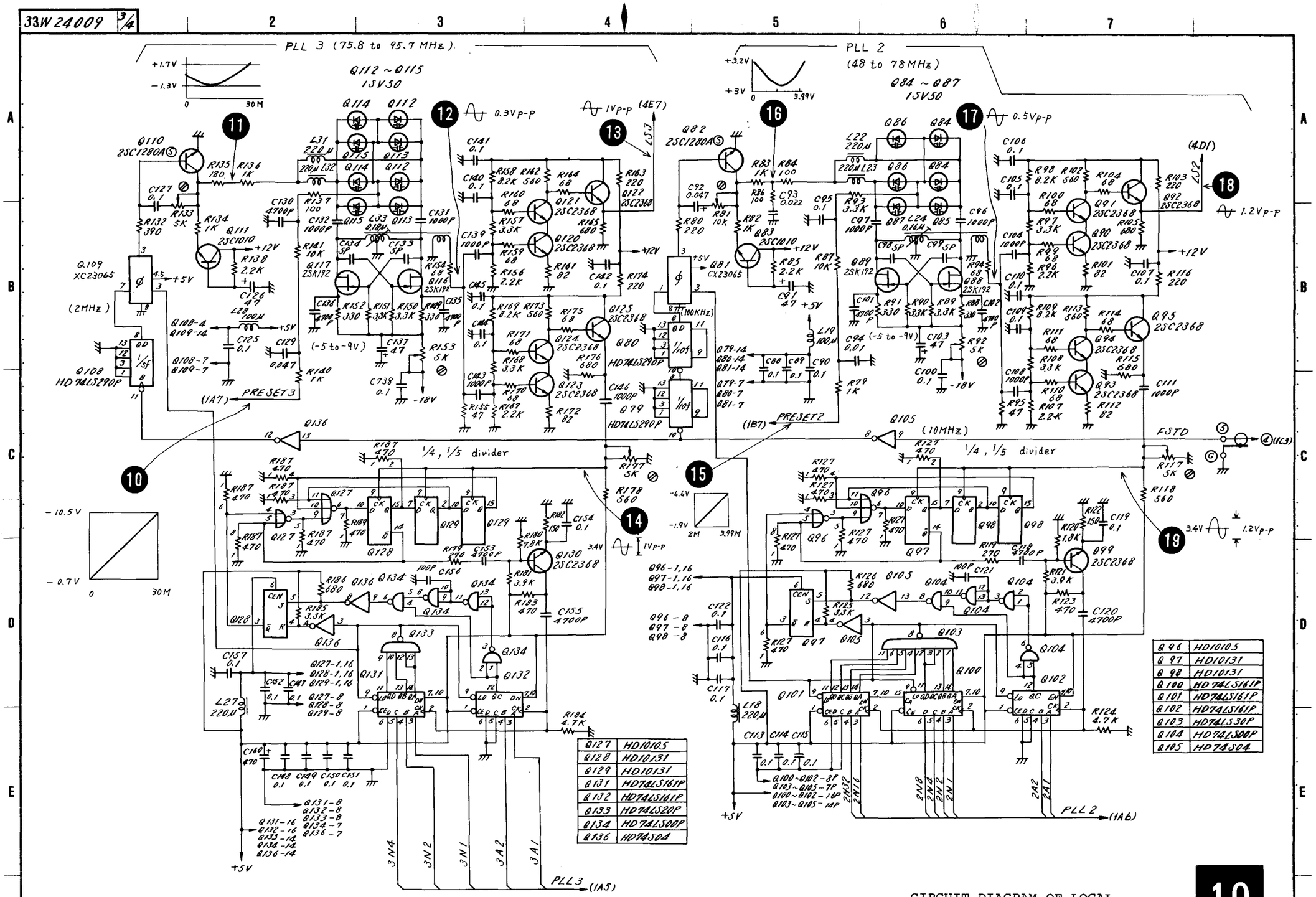

CIRCUIT DIAGRAM OF LOCAL

(33W24009, 3/4)

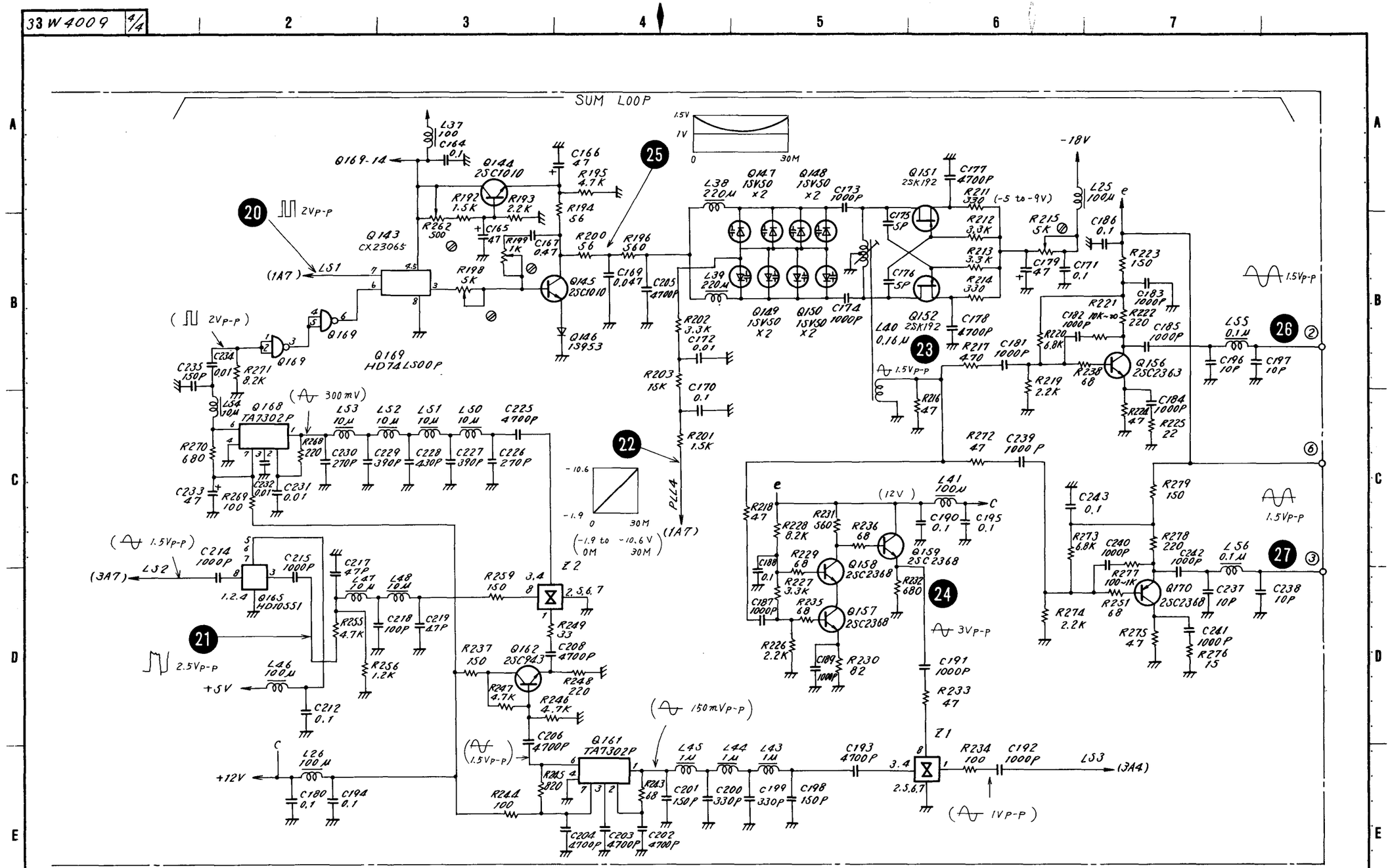

CIRCUIT DIAGRAM OF LOCAL

(33W24009, 4/4)

4 - 90/4 - 91

20

No.153 A3 5.000

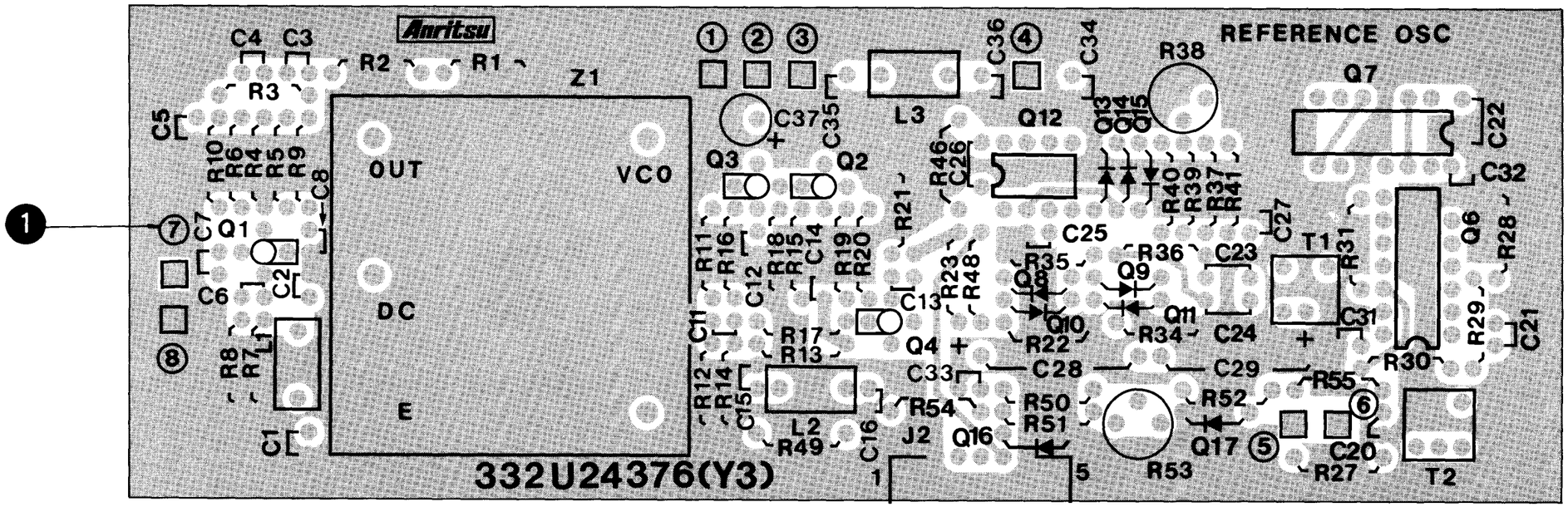

REFERENCE OSC Printed Circuit Board

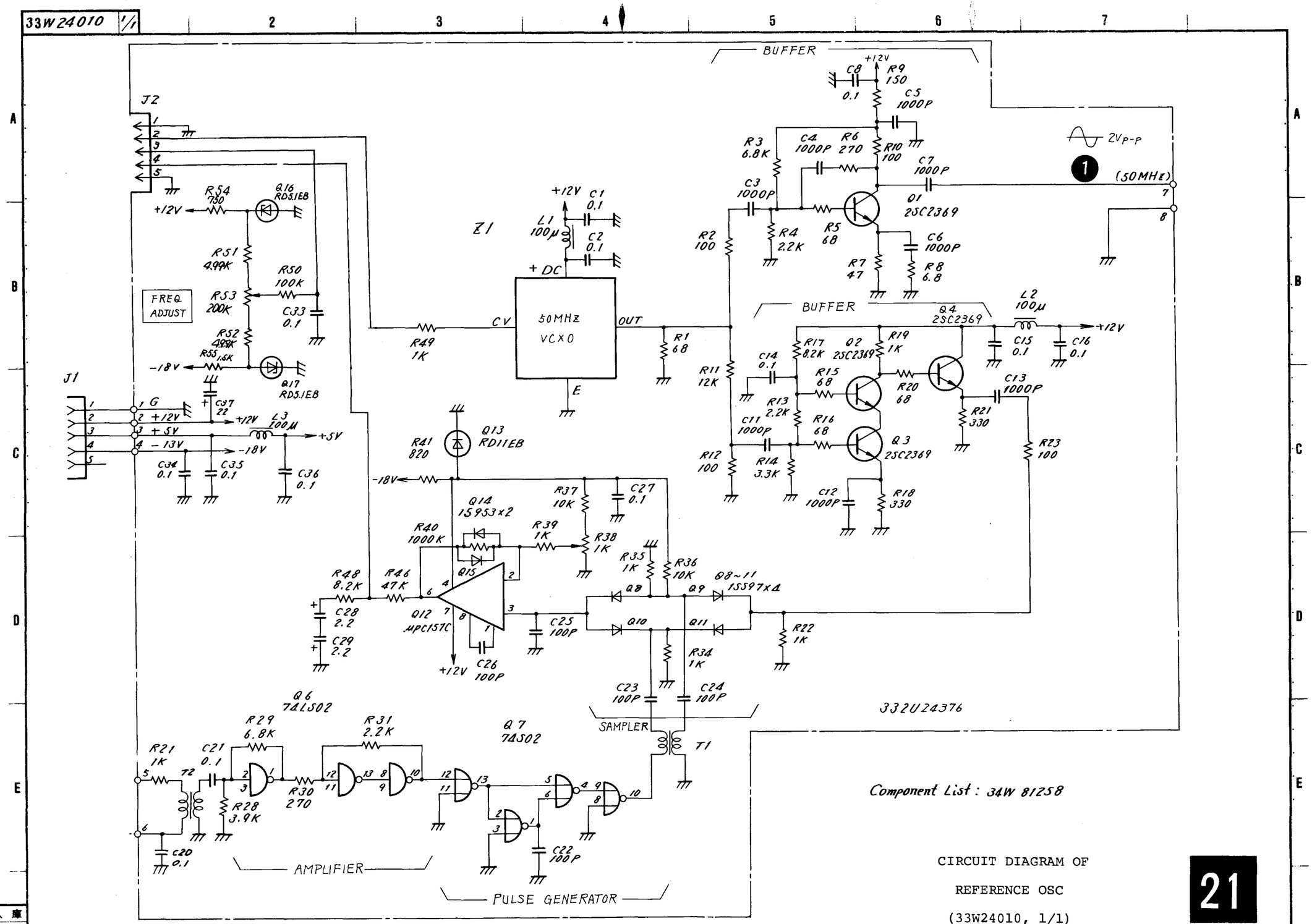

CIRCUIT DIAGRAM OF

REFERENCE OSC

(33W24010, 1/1)

4 - 94/4 - 95

21

入庫

No.153 A3 5.000

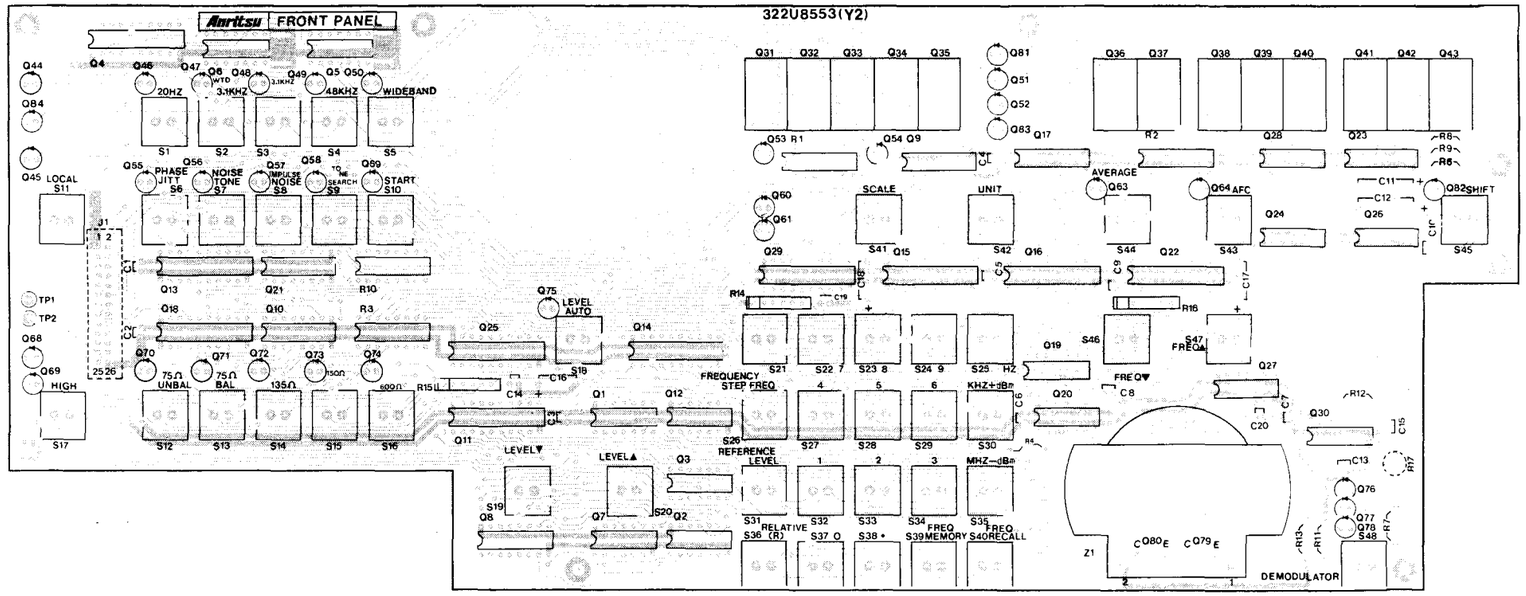

FRONT PANEL Printed Circuit Board

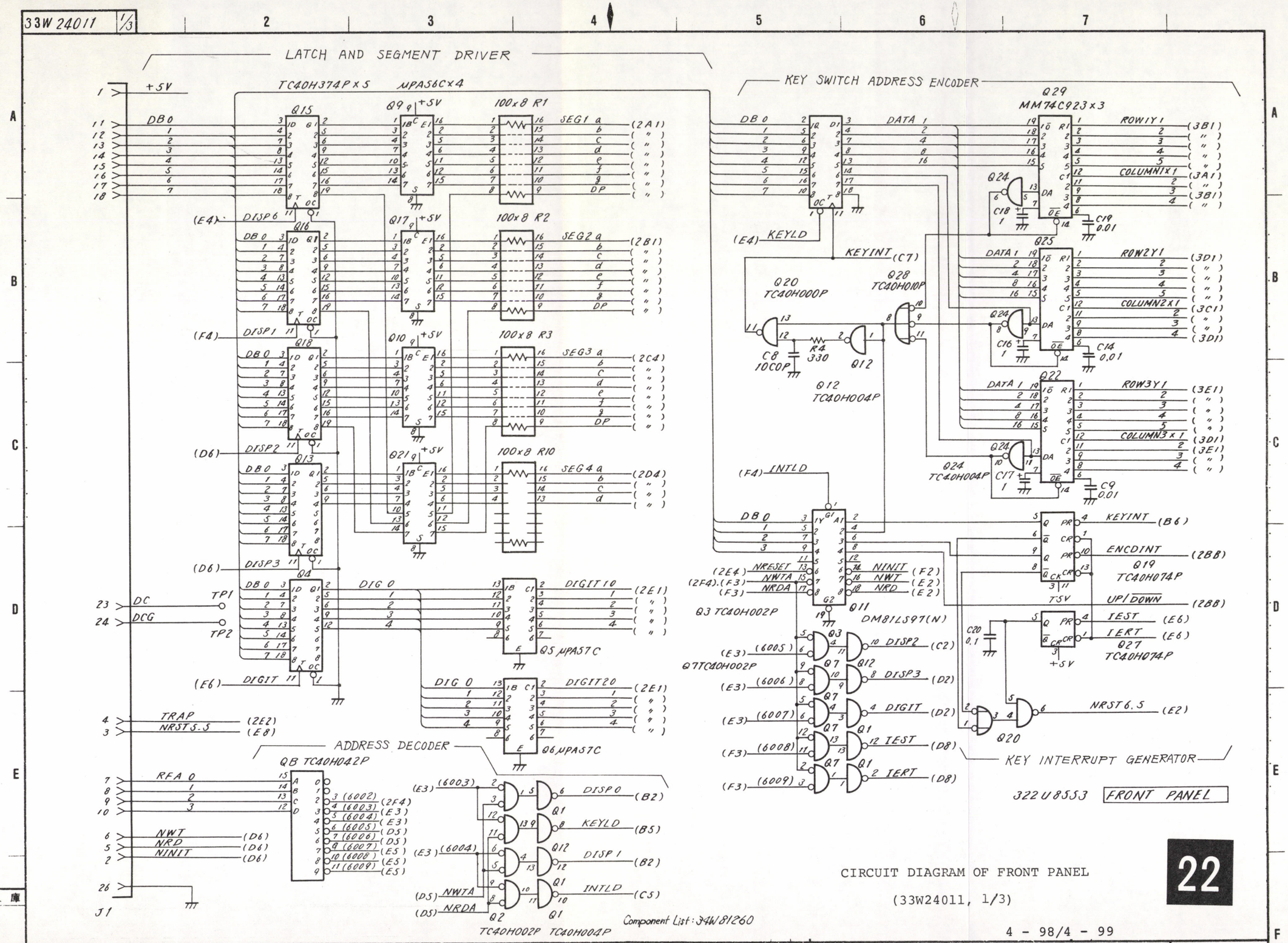

CIRCUIT DIAGRAM OF FRONT PANEL

(33W24011, 1/3)

4 - 98/4 - 99

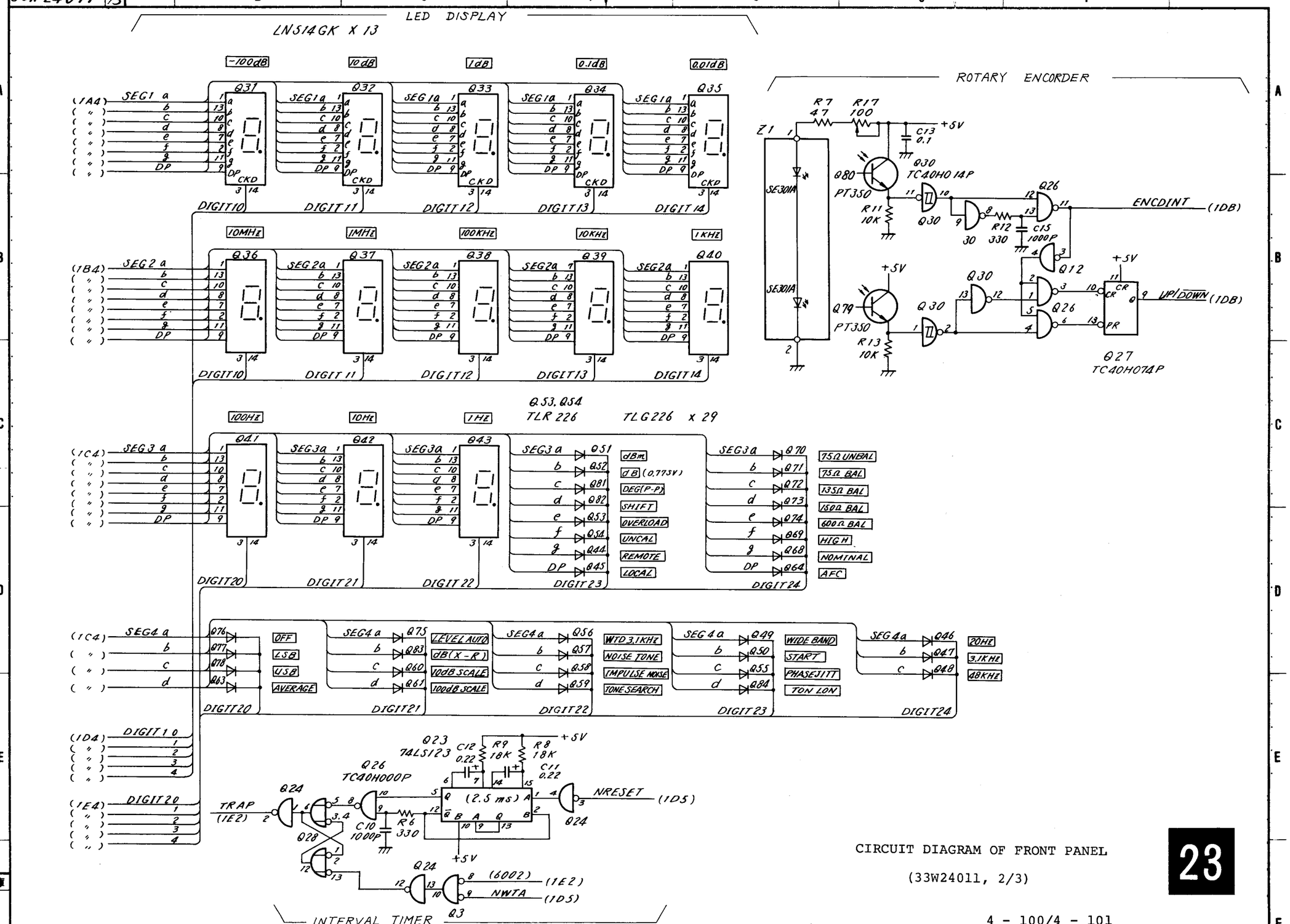

CIRCUIT DIAGRAM OF FRONT PANEL

(33W24011, 2/3)

23

No.153 A3 5.000

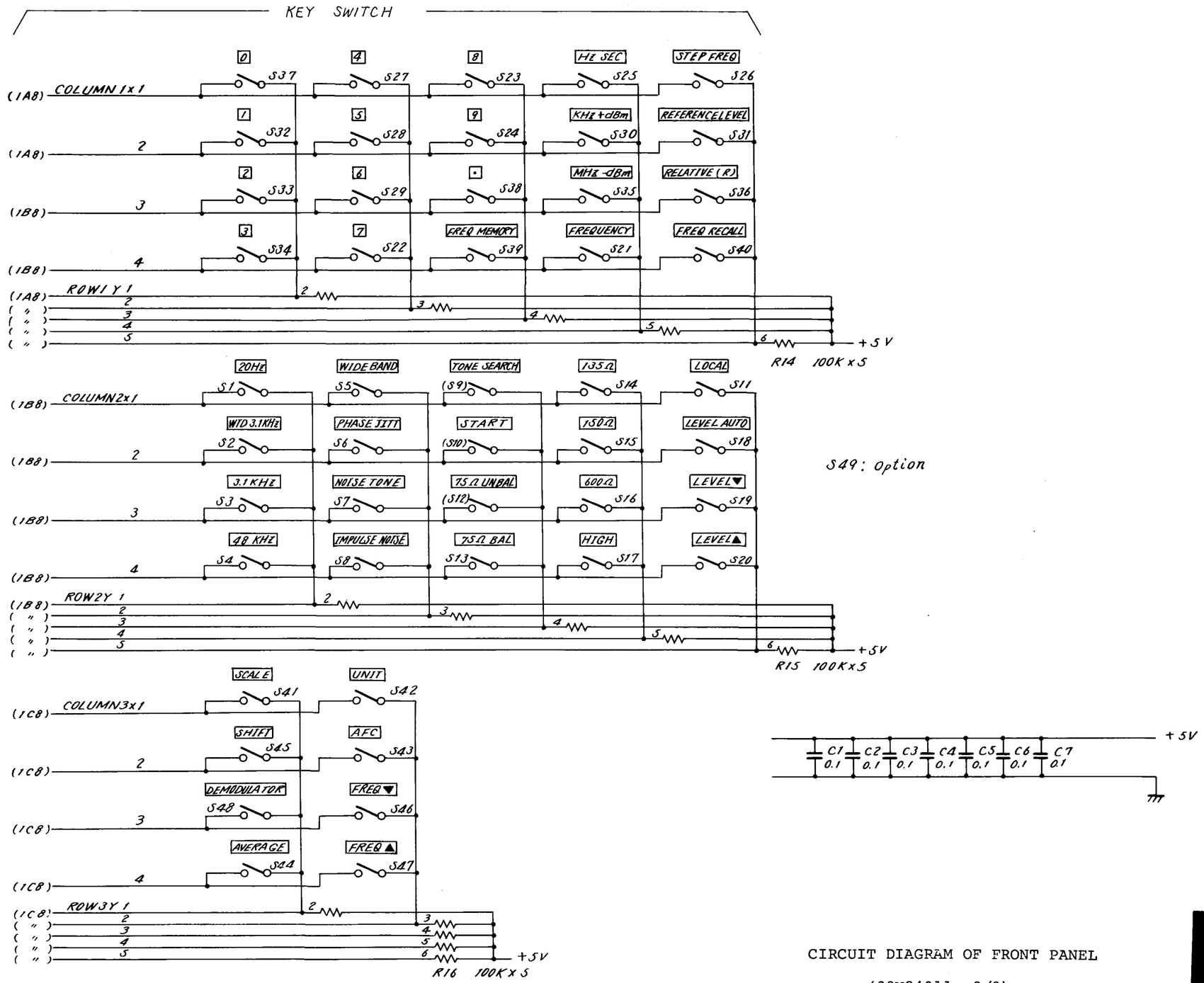

CIRCUIT DIAGRAM OF FRONT PANEL

(33W24011, 3/3)

4 - 102/4 - 103

24

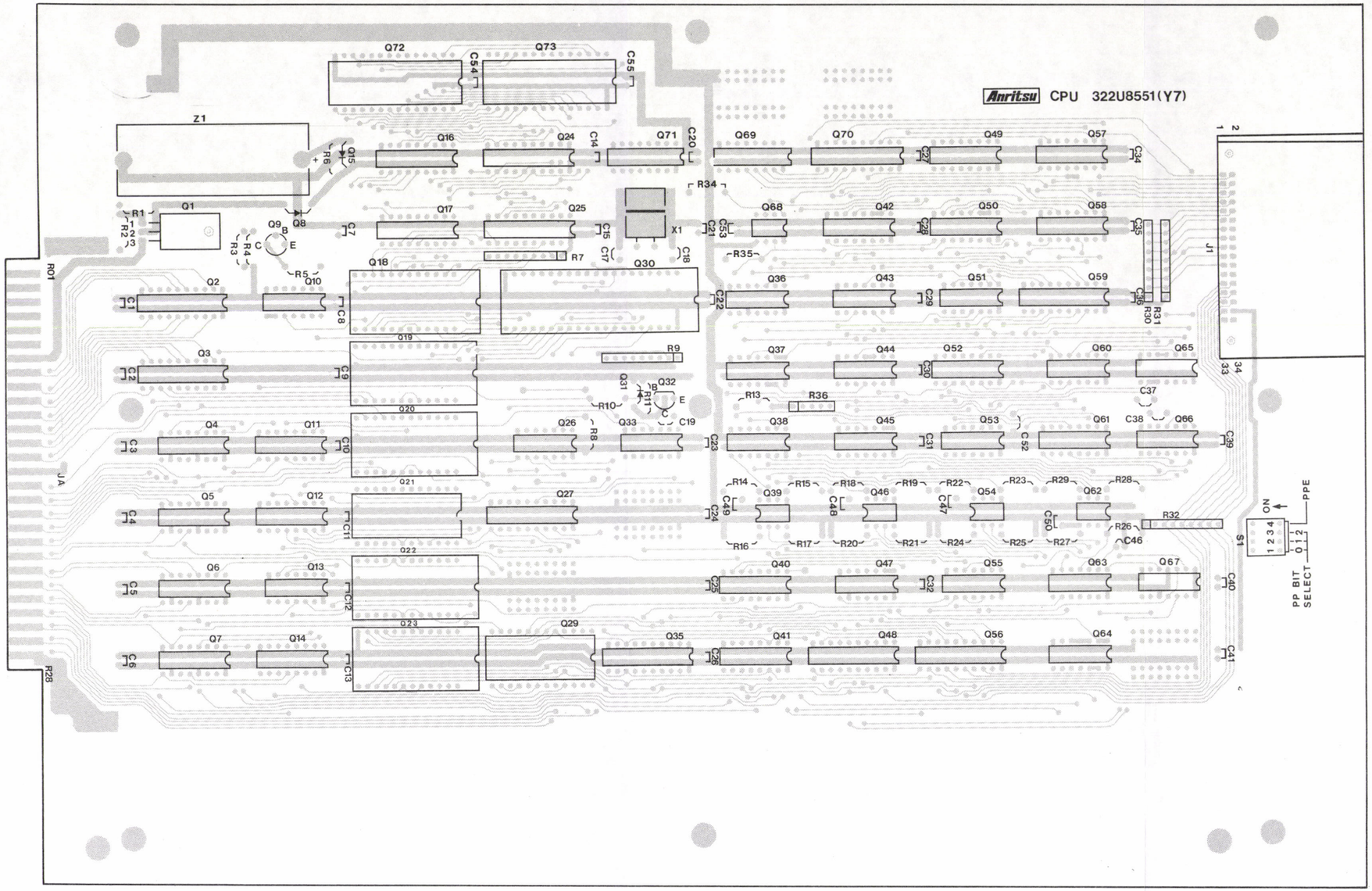

CPU Printed Circuit Board

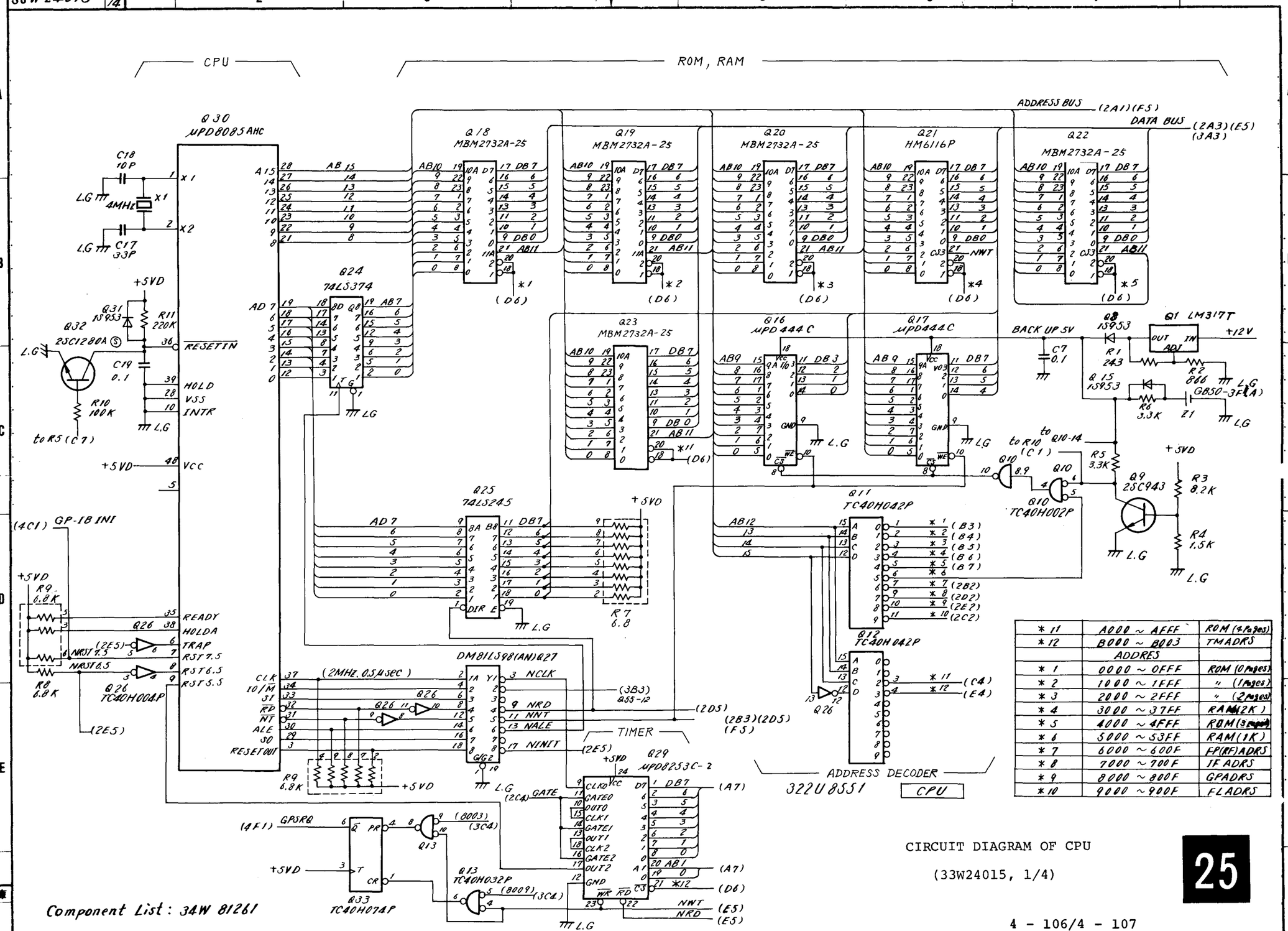

*11	A000 ~ AFFF	ROM (4 Pages)
*12	B000 ~ B003	TMADRS
	ADDRES	
*1	0000 ~ 0FFF	ROM (0 Pages)
*2	1000 ~ 1FFF	" (1 Pages)
*3	2000 ~ 2FFF	" (2 Pages)
*4	3000 ~ 37FF	RAM(2K)
*5	4000 ~ 4FFF	ROM(3 Pages)
*6	5000 ~ 53FF	RAM(1K)
*7	6000 ~ 600F	FP(RF)ADRS
*8	7000 ~ 700F	IF ADRS
*9	8000 ~ 800F	GPADRS
*10	9000 ~ 900F	FLADRS

CIRCUIT DIAGRAM OF CPU

(33W24015, 1/4)

25

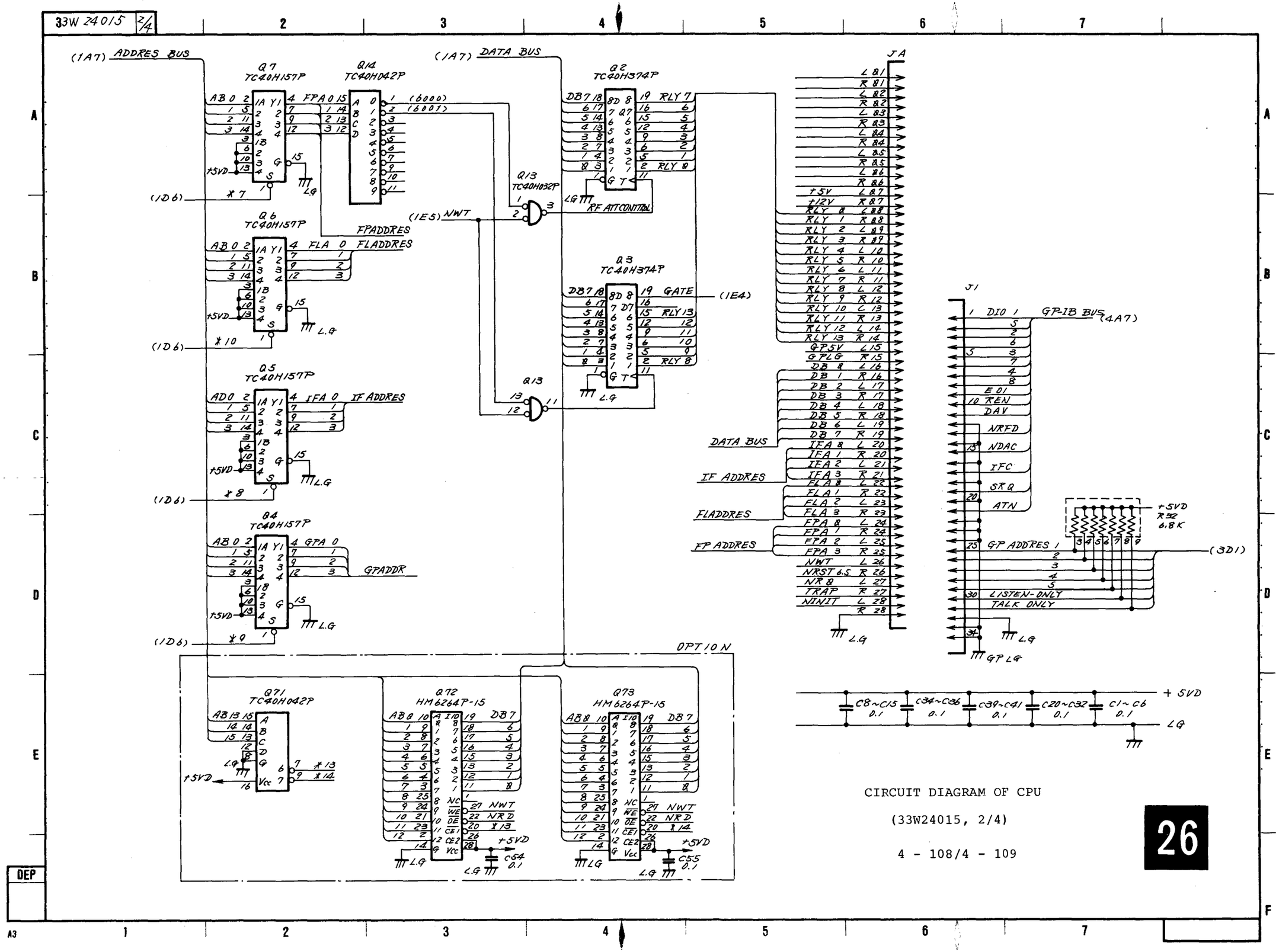

CIRCUIT DIAGRAM OF CPU

(33W24015, 2/4)

4 - 108/4 - 109

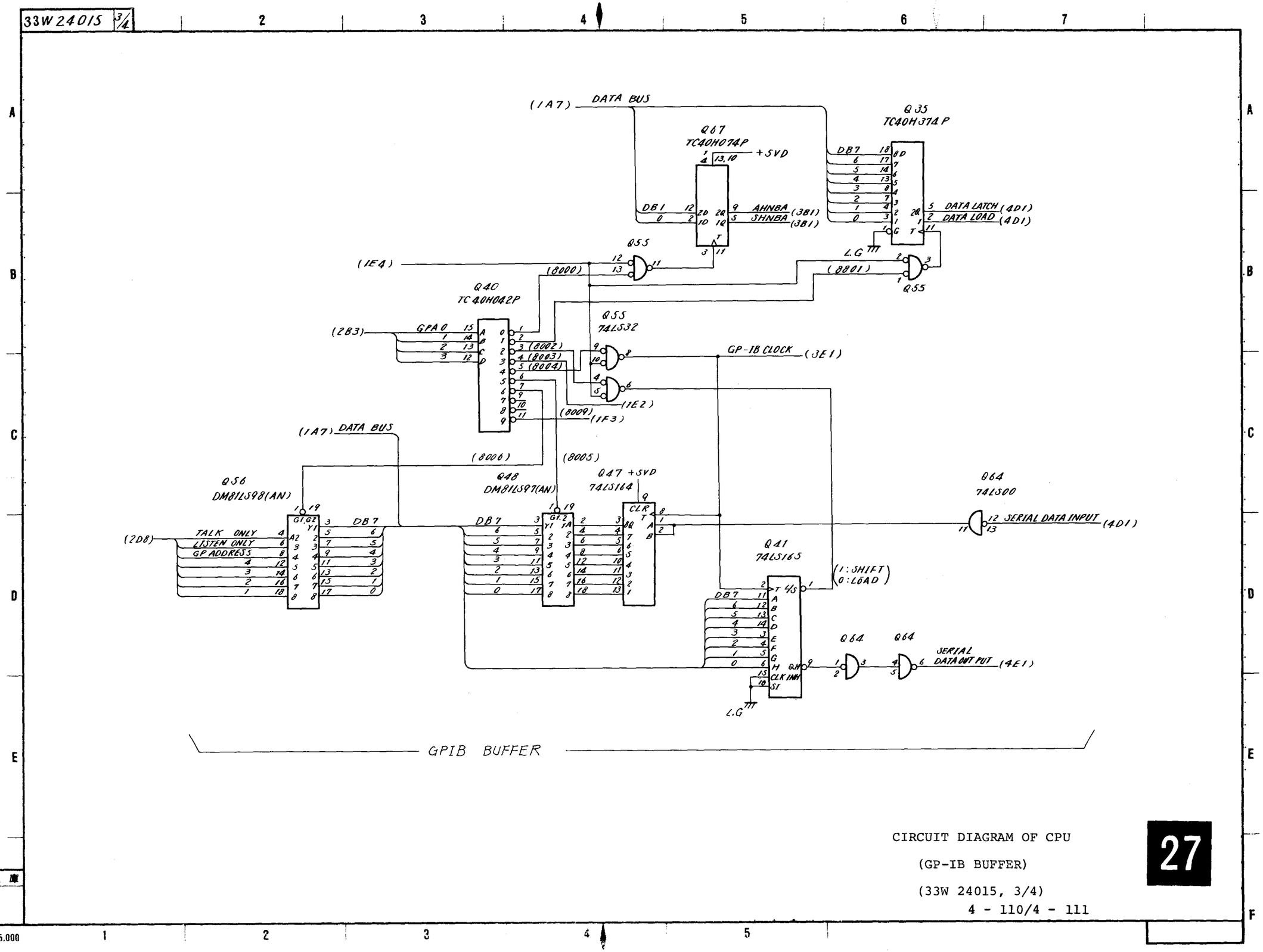

CIRCUIT DIAGRAM OF CPU

(GP-IB BUFFER)

(33W 24015, 3/4)

4 - 110/4 - 111

27

入庫

No.153 A3 5.000

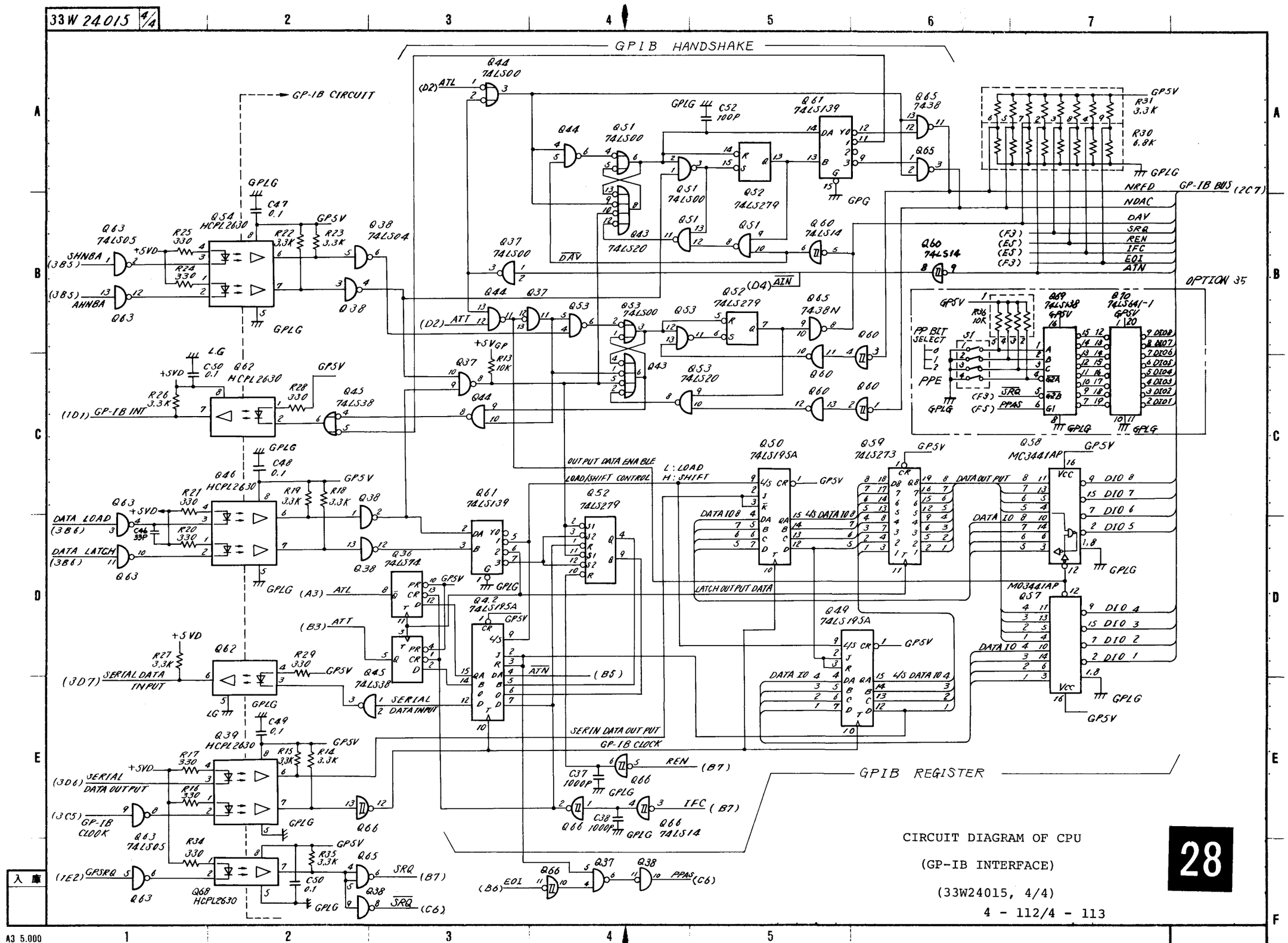

CIRCUIT DIAGRAM OF CPU

(GP-IB INTERFACE)

(33W24015, 4/4)

4 - 112/4 - 113

28

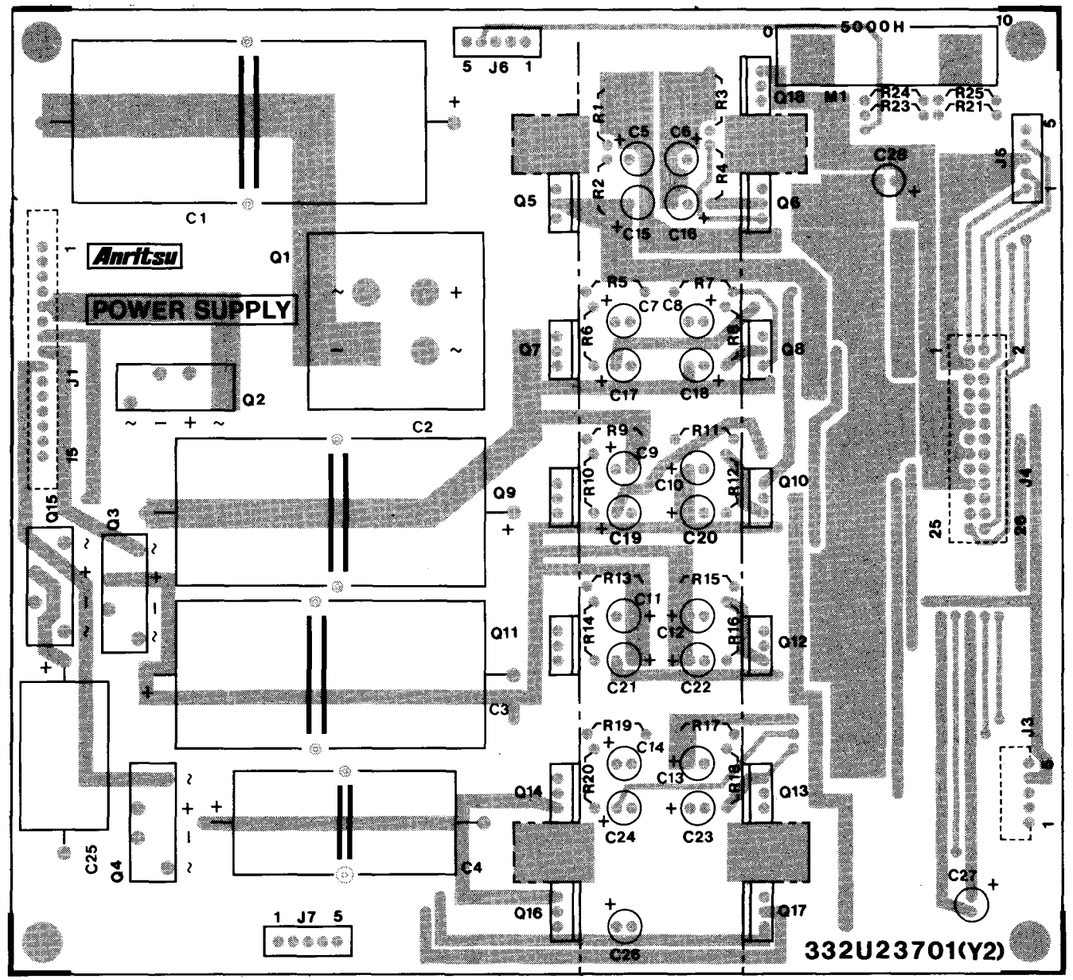

POWER SUPPLY Printed Circuit Board

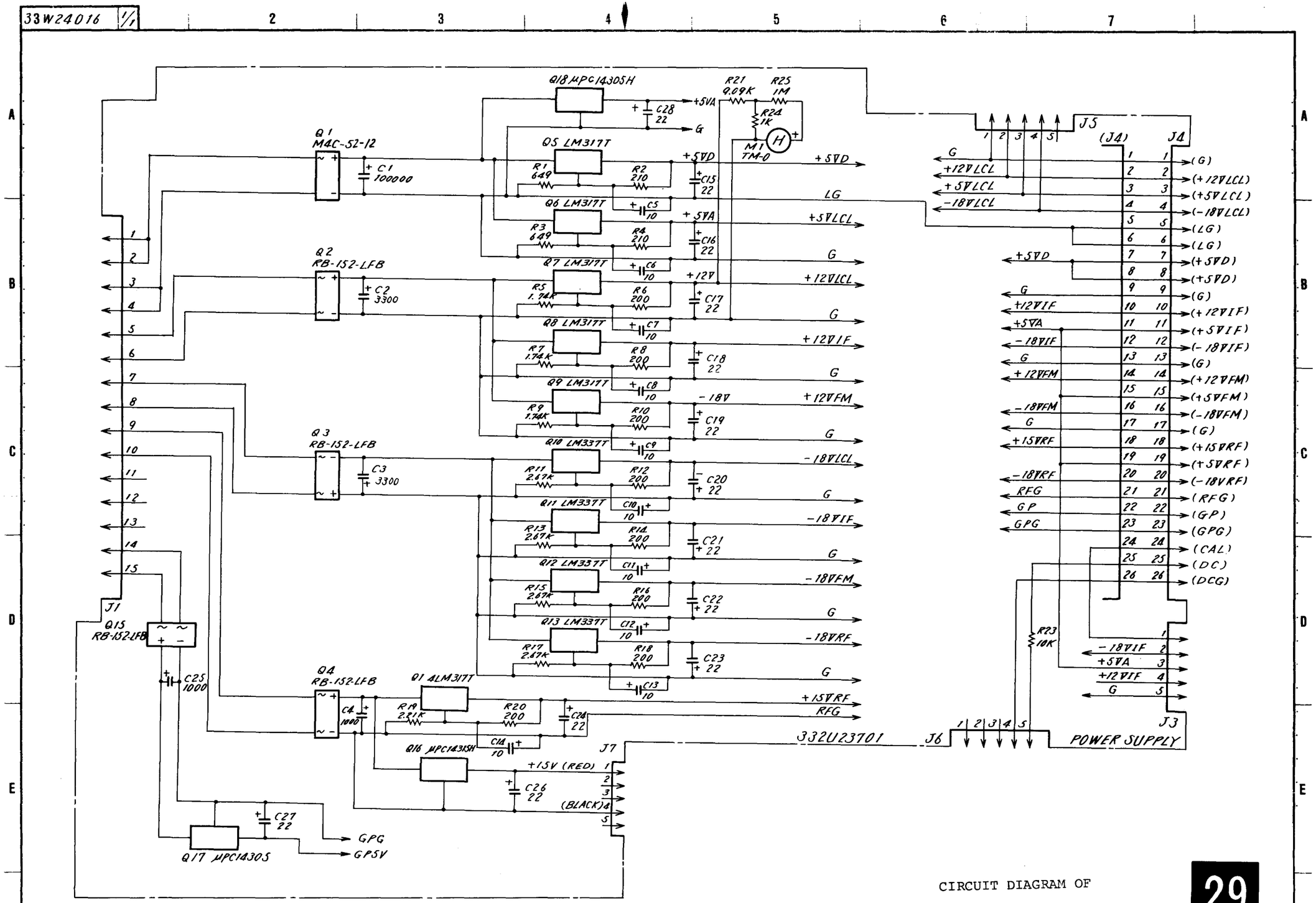

CIRCUIT DIAGRAM OF

POWER SUPPLY

(33W24016, 1/1)

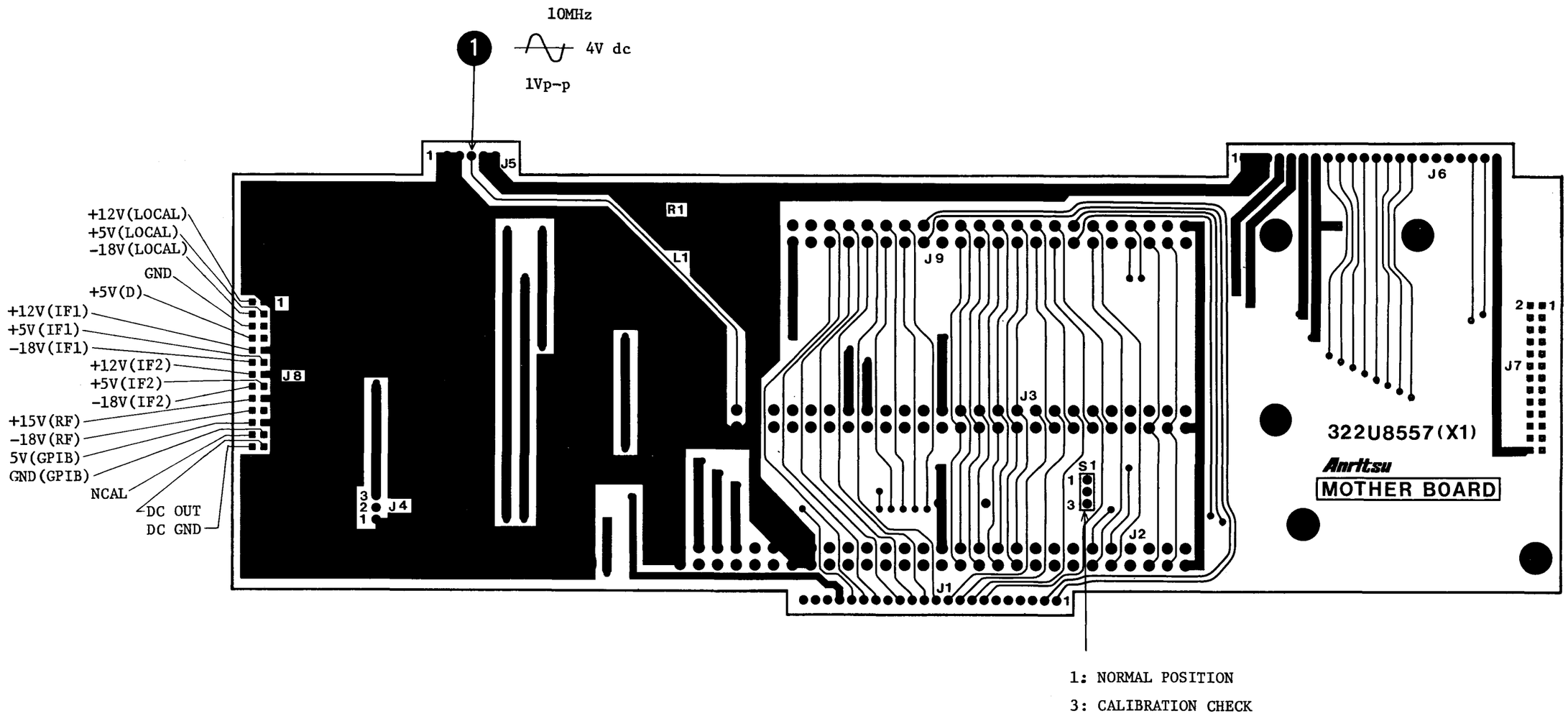

MOTHERBOARD Printed Circuit Board

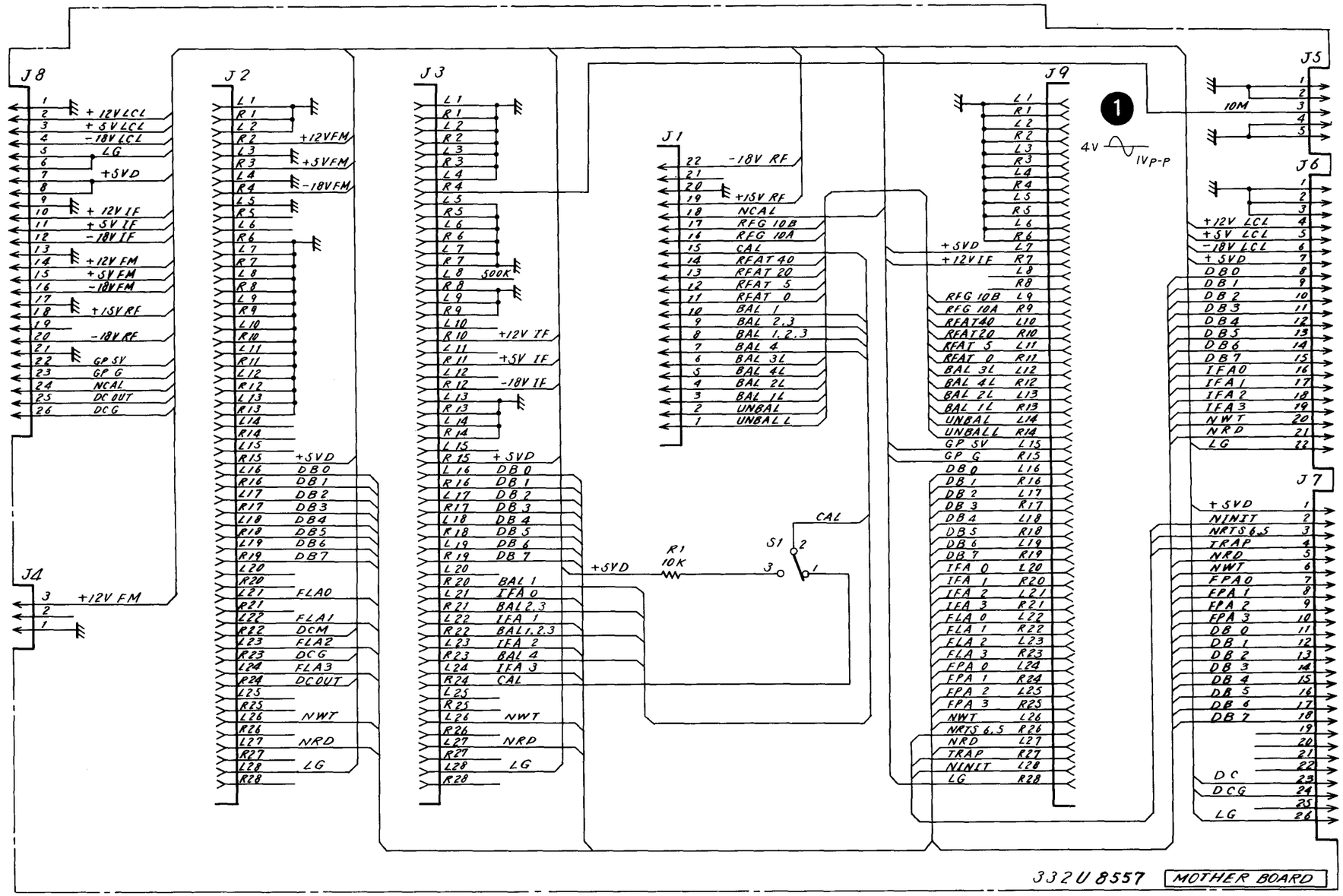

Component List: 34W 81264

CIRCUIT DIAGRAM OF

MOTHERBOARD

(33W24012, 1/1)

30

入庫

No 153 [illegible] 0.000

SECTION 5

REPLACEABLE PARTS

SECTION 5
REPLACEABLE PARTS

5.1 Introduction

This section contains information relative to ordering replacement components. The following table shows circuit references (hereinafter CKT REF) and abbreviations used for components given in the component list. In the component list, the quantity of each component is one so far as no quantitative description is given in the "NOTE" column.

(1) Circuit References

AT: Attenuator	K: Relay	Q: Transistor, Diode, Rectifier, IC	T: Transformer
C: Capacitor	L: Coil	R: Resistor	V: Neon lamp, Vacuumtube
F: Fuse	M: Meter, timer	S: Switch	Z: Unit
J: Jack, plug, connector	P: Lamp		

(2) Abbreviations

A	: amperes	J-FET	: junction FET	PNP	: positive-negative-positive
Att,R var	: attenuator variable using film resistive elemetns	k	: kilo ($x10^3$)	p-p,pp	: peak to peak value
BL	: boundary layer	LED	: light emitting diode	RFC	: RF choke
				R-lamp	: resistor lamp
Cer	: ceramic	M	: mega ($x10^6$)	rms	: effective value (root means square)
CF	: carbon film	m	: milli ($x10^{-3}$)		
Comp	: composition	MF	: metallized film	SBD	: shottky barrier diode
CRT	: cathode-ray tube	MOS-FET	: metal oxide semi-conductor FET	SCR	: sillicon controlled rectifier
		M paper	: metallized paper	Si	: sillicon
Di	: diode	M plast	: metallized plastic film	SRD	: step recovery diode
DIL type	: dual-in line type				
		Multi	: multiplying	Tant	: tantalum
Elect	: electrolyte aluminum			Tr	: transistor
		N ch	: N channel	Trans	: transformer
		non-lin	: non-linear taper	TM	: time-lag
F	: farad	Non-pol	: non-polarity	μ	: micro ($x10^{-6}$)
FET	: field effect transistor	NPN	: negative-positive-negative	V	: volt
				Var	: variable
G	: ground				
Ge	: germanium	Ω	: ohms	WW	: wire wound
H	: henry	p	: pico ($x10^{-12}$)		
Hz	: hertz	Plast	: plastic film	XTAL	: crystal
		PMTR	: potentiometer		
IC	: integrated circuit				
IEC	: applicable to IEC safety standard				

5.2 Method of Reading Capacitors/Resistors

5.2.1 Capacitor identification

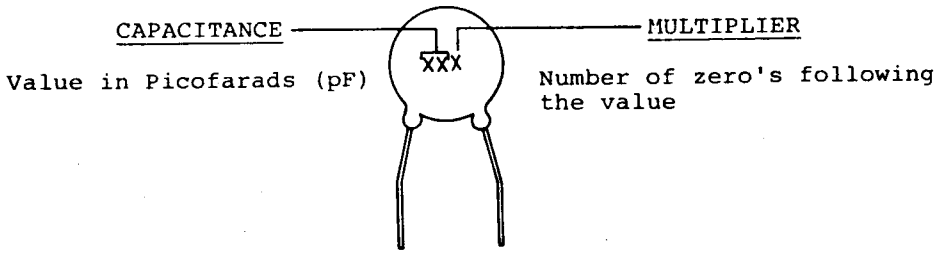

EXAMPLES: 103 = 10,000pF = 10^{-8}F or 0.01μF
302 = 3,000pF = $3x10^{-9}$F or 0.003μF
676 = 67,000,000pF = $67x10^{-6}$F or 67μF

(a) Ceramic capacitor, polyester capacitor

Indication	0.5	1	10	101	102	103	104
Capacity	0.5pF	1pF	10pF	100pF	1000pF	0.01μF	0.1μF

Example:

Ceramic Capacitor

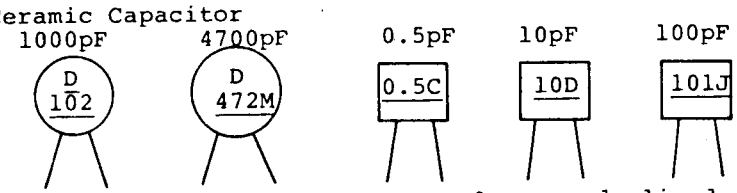

Capacity values are always underlined.

Polyester Capacitor

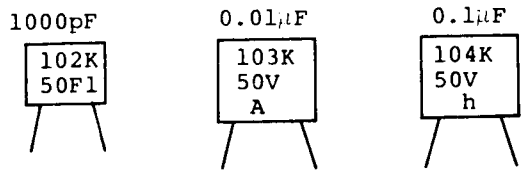

(b) Tantalum capacitor. Metallized capacitor and Electrolytic capacitor

Indication	OR47	010	100	101
Capacity	0.47μF	1μF	10μF	100μF

5.2.2 Resistor identification

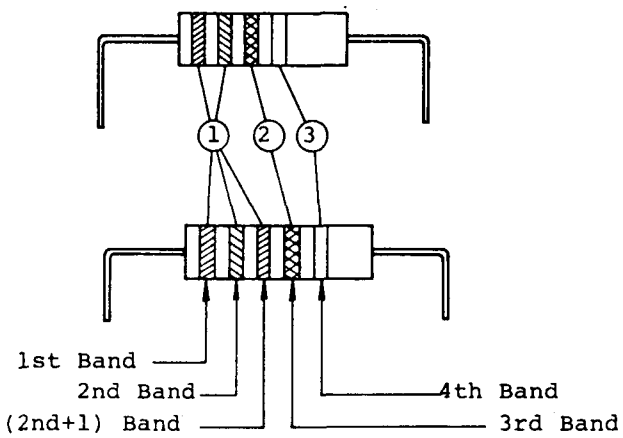

	①		②	③
COLOR	Figure		Multiplier	Tolerance
	1st	2nd	3rd	4th
Black	0	0	$x10^0$	-
Brown	1	1	$x10^1$	-
Red	2	2	$x10^2$	-
Orange	3	3	$x10^3$	-
Yellow	4	4	$x10^4$	-
Green	5	5	$x10^5$	±0.5%
Blue	6	6	$x10^6$	-
Purple	7	7	$x10^7$	-
Grey	8	8	$x10^8$	-
White	9	9	$x10^9$	-
Gold	-	-	$x10^{-1}$	±5%
Silver	-	-	$x10^{-2}$	±10%
-----	-	-		±20%

For Example:

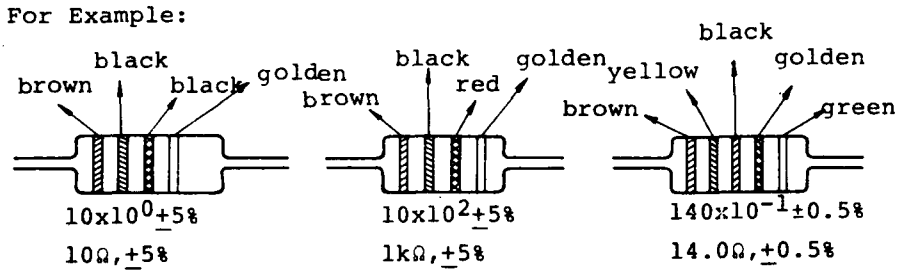

5.3 Ordering Information

Upon ordering components, please give the following descriptions by referring to the COMPONENT LIST.

Item	Example
(1) Name of instrument	Selective Level Meter ML422B/C
(2) Name of component	COMPONENT LIST OF LOCAL
(3) CKT REF	C54
(4) Name of component	ECQ-M1H 472KZ Note: Part name is given in parentheses ( ) in the C.L. (Component List). Components with asterisks* are those that require factory adjustment upon repairing. When ordering a component or components with asterisk, give full description of the component.
(5) Quantity	1
(6) Serial No. of instrument	M31257

5.4 Component List

COMPONENT LIST OF SELECTIVE LEVEL METER ML422B/C

CKT REF	DESCRIPTION	RATING		NOTE
A 1	Speaker,(SM-45W)			
F 1	Fuse,(MF51NN250V *** A AC05)	*** A,250V		
F 2	Fuse,(MF51NN250V *** A AC05)	*** A,250V		
G 1	DC fan,(FB08B24H)			
J 1	Receptacle,(3C-R)			
J 2	Connector,(3 pole CF)			
J 3	Connector,(3 pole CF)			
J 4	Receptacle,(BNC-757)			
J 5	Plug,(MP2.5CLP)			
J 6	Receptacle,(MP2.5CR)			
J 7	Plug,(MP2.5CLP)			
J 8	Plug,(MP2.5CP)			
J 9	Plug,(MP2.5CP)			
J 10	Plug,(27DP-LP-1.5)			
J 11	Plug,(MP2.5CP)			
J 12	Receptacle,(MP2.5CR)			
J 13	Plug,(MP2.5CP)			
J 14	Receptacle,(MP-2.5CR)			
J 15	Plug,(MP2.5CR)			
J 16	Receptacle,(MP2.5CR)			
J 17	Receptacle,(HNC2-2.5S-5)			
J 18	Connector,(U-SA0503)	5 pins		
J 19	Connector,(U-SA0503)	5 pins		
J 20	Connector,(U-SA0503)	5 pins		
J 21	Connector,(U-SA0503)	5 pins		
J 22	Receptacle,(BNC31-101)			
J 23	Connector,(U-SA1003)	10 pins		
J 24	Jack,(HJZ-21)			
J 25	Connector, (HNC2-2.5S-3)			
J 26	Receptacle,(MSS-R)			
J 27	Connector,(U-SB1503)	15 pins		
J 28	Terminal,(500/12DS)			

( ): Manufacturer's part number

* : Selected at factory

34W81252	1/3

COMPONENT LIST OF SELECTIVE LEVEL METER ML422B/C

CKT REF	DESCRIPTION	RATING		NOTE
J 29	Terminal,(A-12)			
J 30	Inlet, (8843-2.SP.FL.4/3,64)			
J 31	Plug,(27DP-LP-1.5)			
J 32	Receptacle,(27DP-BR)			
J 33	Connector,(57FE-2040-20SD 35X1)			
J 34	Connector,(FPC2-A034-30SX1)			
J 35	Receptacle,(BNC31-101)			
J 36	Receptacle,(BNC-757)			
37	Plug,(27DP-LP-1.5)			
38	Plug,(MP2.5CP)			
39	Panel jack (MP2.5CPJ)			
M 1	Meter,(34M80283)			
R 1	Var,MF,(RG161N15SB 20kΩM)	20kΩ		
R 2	CF,(ARD25T105J)	1MΩ,±5%,1/4W		
S 1	Switch,(ESB-9997)			
S 2	Switch,(8E2011)			
S 3	Switch,(DIP-A(8))			
T 1	Power trans,(34T75906)			
U 1	Filter,(FN5150S)			
U 2	Filter,(FN5150S)			
Z 1	RF 1 P.C. BOARD			
Z 2	CAL P.C. BOARD			
Z 3	RF 2 P.C. BOARD			
Z 4	LOCAL P.C. BOARD			
Z 5	REFERENCE OSC P.C. BOARD			
Z 6	FRONT PANEL P.C. BOARD			
Z 7	MOTHER BOARD P.C. BOARD			
Z 8	IF 1 P.C. BOARD			

( ): Manufacturer's part number

* : Selected at factory

34W81252	2/3

COMPONENT LIST OF SELECTIVE LEVEL METER ML422B/C

CKT REF	DESCRIPTION	RATING		NOTE
Z 9	IF 2 P.C. BOARD			
Z 10	CPU P.C. BOARD			
Z 11	POWER SUPPLY P.C. BOARD			
Z 12	Not assigned			
Z 13	BPF Assembly			
Z 14	Line filter, (ZMB2203-13)			
Z 15	Buffer amplifier			

( ): Manufacturer's part number

* : Selected at factory

34W81252	3/3

COMPONENT LIST OF RF 1

CKT REF	DESCRIPTION	RATING		NOTE
C 1	Cer,(CC924CH1H390J)	39pF,±5%,50V		
C 2	Cer,(CC924CH1H360J)	36pF,±5%,50V		
C 3	Cer,(CK924C1H103M)	0.01μF,±20%,50V		
C 4	Cer,(CK924C1H103M)	0.01μF,±20%,50V		
C 5	Cer,(CK924C1H103M)	0.01μF,±20%,50V		
C 6	Cer,(CK924C1H103M)	0.01μF,±20%,50V		
C 7	Cer,(CK924C1H103M)	0.01μF,±20%,50V		
C 8	Cer,(CK924C1H103M)	0.01μF,±20%,50V		
C 9	Elect,(CE04W1V220)	22μF,±20%,35V		
C 10	Cer,(CK924C1H103M)	0.01μF,±20%,50V		
C 11	Cer,(CK924C1H103M)	0.01μF,±20%,50V		
C 12	Cer,(CC92CH1H050D)	5pF,±0.5pF,50V		
C 13	Cer,(CK924C1H103M)	0.01μF,±20%,50V		
C 14	Cer,(CK924C1H103M)	0.01μF,±20%,50V		
C 15	Elect,(CE04W1V220)	22μF,±20%,35V		
C 16	Cer,(CC924CH1H470J)	47pF,±5%,50V		
C 17	Cer,(CC924CH1H390J)	39pF,±5%,50V		
C 18	Cer,(CC924CH1H220J)	22pF,±5%,50V		
C 19	Elect,(CE04W1V220)	22μF,±20%,35V		
C 20	Cer,(CK924C1H103M)	0.01μF,±20%,50V		
C 21	Cer,(CK924C1H103M)	0.01μF,±20%,50V		
C 22	Cer,(CK924C1H103M)	0.01μF,±20%,50V		
C 23	Cer,(CK924C1H103M)	0.01μF,±20%,50V		
C 24	Cer,(CC924CH1H820J)	82pF,±5%,50V		
C 25	Cer,(CC924CH1H060D)	6pF,±0.5pF,50V		
C 26	Cer,(CC924CH1H080D)	8pF,±0.5pF,50V		
C 27	Var,cer,(TZ03Z070A)	7pF,100V		
C 28	Var,cer,(TZ03Z070A)	7pF,100V		
C 29	Cer,(GR40UJ220J50V)	22pF,±5%,50V		Q'ty 2, Parallel
C 30	Cer,(GR40CH220J50V)	22pF,±5%,50V		Q'ty 2, Parallel
C 31	Cer,(GR40CH101J50V)	100pF,±5%,50V		
C 32	Cer,(GR40CH101J50V)	100pF,±5%,50V		
C 33	Cer,(GR40CH101J50V)	100pF,±5%,50V		
C 34	Cer,(RPE113C474K50)	0.47μF,±10%,50V		
C 35	Cer,(RPE113C474K50)	0.47μF,±10%,50V		
C 36	Cer,(CC924CJ1H030C)	3pF,±0.25pF,50V		
C 37	Var,cer,(TTS70SL020)	2pF,100V		
C 38	Cer,(CC924CH1H080D)	8pF,±0.5pF,50V		
C 39	Cer,(RD340CK010CY50)	1pF,±0.25pF		
C 40	Cer,(CK924C1H103M)	0.01μF,±20%,50V		
C 41	Elect,(CE04W1E221)	220μF,±20%,25V		
C 42	Cer,(CC924CH1H330J)	33pF,±5%,50V		
C 43	Elect,(CE04W1E471)	470μF,±20%,25V		
C 44	Elect,(CE04W1E471)	470μF,±20%,25V		
C 45	Elect,(CE04W1A471)	470μF,±20%,10V		

( ): Manufacturer's part number

* : Selected at factory

34W81253	1/7

COMPONENT LIST OF RF 1

CKT REF	DESCRIPTION	RATING		NOTE
C 46	Elect,(CE04W1A221)	220μF,±20%,10V		
C 47	Cer,(CC924CH1H150J)	15pF,±5%,50V		
C 48	Cer,(CC924CH1H150J)	15pF,±5%,50V		
C 49	Var,cer,(TZ03Z070A)	7pF,100V		
C 50	Cer,(RPE110UJ100D50)	10pF,±0.5pF,50V		
C 51	Cer,(CK924C1H103M)	0.01μF,±20%,50V		
C 52	Elect,(CE04W1V220)	22μF,±20%,35V		
C 53	Elect,(CE04W1A221)	220μF,±20%,10V		
C 54	Cer,(CC924CH1H*D)	0 to 4pF,±0.5pF,50V		Q'ty 0 or 1*
C 55	Cer,(CC924CH1H040D)	4pF,±0.5pF,50V		
C 56	Cer,(CC924CH1H200J)	20pF,±5%,50V		
C 57	Var,cer,(TZ03Z070A)	7pF,100V		
C 58	Var,cer,(TTS70SL020)	2pF,100V		
C 59	Elect,(CE04W1E221)	220μF,±20%,25V		
C 60	Elect,(CE04W1E221)	220μF,±20%,25V		
C 61	Elect,(CE04W1E470)	47μF,±20%,25V		
C 62	Elect,(CE04W1E470)	47μF,±20%,25V		
C 63	Elect,(CE04W1E221)	220μF,±20%,25V		
C 64	Elect,(CE04W1E221)	220μF,±20%,25V		
C 65	Elect,(CE04W1E221)	220μF,±20%,25V		
C 66	Elect,(CE04W1E471)	470μF,±20%,25V		
C 67	Elect,(CE04W1E221)	220μF,±20%,25V		
C 68	Elect,(CE04W1E221)	220μF,±20%,25V		
C 69	Elect,(CE04W1E470)	47μF,±20%,25V		
C 70	Cer,(CC924CH1H220J)	22pF,±5%,50V		
C 71	Cer,(CC924CH1H030D)	3pF,±0.5pF,50V		
C 72	Elect,(CE04W1E471)	470μF,±20%,25V		
C 73	Elect,(CE04W1A471)	470μF,±20%,10V		
C 74 to C 91	Cer,(CK924C1H103M)	0.01μF,±20%,50V		
C 92	Cer,(CK924C1H104M)	0.1μF,±20%,50V		
C 93	Cer,(CK924C1H104M)	0.1μF,±20%,50V		
C 94	Cer,(CK924C1H103M)	0.01μF,±20%,50V		
C 95	Cer,(CK924C1H103M)	0.01μF,±20%,50V		
C 96	Elect,(CE04W1V220)	22μF,±20%,35V		
C 97	Elect,(CE04W1V220)	22μF,±20%,35V		
C 98	Not assigned			
C 99	Elect,(CE04W1V220)	22μF,±20%,35V		
C 100	Elect,(CE04W1V220)	22μF,±20%,35V		
C 101	Cer,(CK924C1H103M)	0.01μF,±20%,50V		
C 102	Cer,(CK924C1H103M)	0.01μF,±20%,50V		
C 103	Elect,(CE04W1V220)	22μF,±20%,35V		
C 104	Elect,(CE04W1V220)	22μF,±20%,35V		
C 105	Cer,(CC924CH1H*J)	0 to 33pF,±5%,50V		Q'ty 0 or 1 *, 0pF

( ): Manufacturer's part number

* : Selected at factory

34W81253	2/7

COMPONENT LIST OF RF 1

CKT REF	DESCRIPTION	RATING		NOTE
C 106	Cer,(CC924CH1H*J)	0 to 33pF,±5%,50V		Q'ty 0 or 1 *, 0pF
J 1	Connector,(U-SA2250)	22 pins		
K 1	Reed relay,(MT03A)	1.1kΩ,12V		
K 2	Reed relay,(MT03A)	1.1kΩ,12V		
K 3	Reed relay,(MT03A)	1.1kΩ,12V		
K 4	Reed relay,(MT03A)	1.1kΩ,12V		
K 5	Reed relay,(MT03A)	1.1kΩ,12V		
K 6	Reed relay,(MT03A)	1.1kΩ,12V		
K 7	Relay,(PG1A-12DM)	1kΩ,12V		
K 8	Reed relay,(MT03A)	1.1kΩ,12V		
K 9	Not assigned			
K 10	Reed relay,(MT03A)	1.1kΩ,12V		
K 11	Relay,(PG1A-12DM)	1kΩ,12V		
K 12	Relay,(NR-SD-12V)	890Ω,12V		
K 13	Relay,(NR-SD-12V)	890Ω,12V		
K 14	Relay,(NR-SD-12V)	890Ω,12V		
K 15	Not assigned			
K 16	Relay,(NR-SD-12V)	890Ω,12V		
K 17	Relay,(NR-SD-12V)	890Ω,12V		
K 18	Relay,(NR-SD-12V)	890Ω,12V		
K 19	Relay,(NR-SD-12V)	890Ω,12V		
K 20	Relay,(NR-SD-12V)	890Ω,12V		
K 21	Relay,(NR-SD-12V)	890Ω,12V		
K 22	Relay,(NR-SD-12V)	890Ω,12V		
L 1	Coil,(10K17-75T)	0.28μH		
L 2	Coil,(34L42105K)	0.1μH		
L 3	Coil,(SP0408-R22K)	0.22μH		
L 4	Coil,(SP0408-1R0K)	1μH		
L 5	Coil,(SP0408-1R0K)	1μH		
L 6	Microinductor, (LF8-220K)	22μH		
L 7	Coil,(SP0408-R82K)	0.82μH		
L 8	Coil,(10K17-45T)	0.16μH		
L 9	Coil,(10K17-75T)	0.28μH		
L 10	Coil,(10K17-45T)	0.16μH		

( ): Manufacturer's part number

* : Selected at factory

34W81253	3/7

COMPONENT LIST OF RF 1

CKT REF	DESCRIPTION	RATING		NOTE
L 11	Coil,(SCN-5962A)	0.68μH		
L 12	Microinductor, (LF8-101K)	100μH		
L 13	Microinductor, (LF8-101K)	100μH		
L 14	Microinductor, (LF8-101K)	100μH		
L 15	Microinductor, (LF8-101K)	100μH		
L 16	Microinductor, (LF8-101K)	100μH		
L 17	Coil,(SP0408-R82 to 2R2K)	0.82 to 2.2μH		*,1μH
L 18	Coil,(SP0408-2R2 to 4R7K)	2.2 to 4.7μH		*,3.3μH
Q 1	J-FET,N ch,(2SK152)			
Q 2	Tr,Si,NPN,(2SC2369)			
Q 3	Tr,Si,NPN,(2SC2369)			
Q 4	Not assigned			
Q 5	Tr,Si,NPN,(2SC2369)			
Q 6	Tr,Si,PNP,(2SA711)			
Q 7	Tr,Si,NPN,(2SC2369)			
Q 8	Not assigned			
Q 9	Tr,Si,NPN,(2SC2369)			
Q 10	Tr,Si,PNP,(2SA711)			
Q 11	IC,(μPA67C)			
Q 12	IC,(μPA67C)			
Q 13	IC,(μPA67C)			
Q 14	IC,(μPA54H)			
Q 15	IC,(μPA54H)			
Q 16	IC,(μPA54H)			
Q 17	IC,(TC4053BP)			
Q 18	Not assigned			
Q 19	IC,(LM317T)			
Q 20	Di,Si,(1S953)			
Q 21	Di,Si,(1S953)			
Q 22	Tr,Si,NPN,(2SC943)			
Q 23	Tr,Si,PNP,(2SA708)			
Q 24	Di,breakdown,(RD11E)	10.4 to 12.3V,400mW		
Q 25	IC,(μPC258C)			
Q 26	Di,Si,(1S953)			
Q 27	Di,Si,(1S953)			
Q 28	Tr,Si,PNP,(2SA603)			
Q 29	Tr,Si,NPN,(2SC1008)			
Q 30	Di,breakdown,(RD11E)	10.4 to 12.3V,400mW		

( ): Manufacturer's part number

* : Selected at factory

34W81253	4/7

COMPONENT LIST OF RF 1

CKT REF	DESCRIPTION	RATING		NOTE
Q 31	Di,Si,(1SZ50)			
Q 32	J-FET,N ch,(2SK152)			
Q 33	Tr,Si,NPN,(2SC2369)			
R 1	Var,MF,(RJ-6P 100Ω)	100Ω,1/2W		
R 2	Var,FM,(RJ-6P 2kΩ)	2kΩ,1/2W		
R 3	MF,(RTF1C4 76ΩF)	76Ω,±1%,1W		
R 4	MF,(RTF1C4 76ΩF)	76Ω,±1%,1W		
R 5	MF,(RTF1C4 125ΩF/137ΩF)	125Ω/137Ω,±1%,1W		ML422B/ ML422C
R 6	MF,(RTF1C4 137ΩF/152ΩF)	137Ω/152Ω,±1%,1W		ML422B/ ML422C
R 7	MF,(RTF1C4605ΩF)	605Ω,±1%,1W		
R 8	CF,(ARD25T*J)	1k to 2.2kΩ,±5%,1/4W		*, 1.2k
R 9	CF,(ARD25T*J)	1k to 2.2kΩ,±5%,1/4W		*, 1.2k
R 10	Var,MF,(RJ-6P 2kΩ)	2kΩ,1/2W		
R 11	CF,(ARD25T100J)	10Ω,±5%,1/4W		
R 12	CF,(ARD25T100J)	10Ω,±5%,1/4W		
R 13	MF,(RN14K2E1002D)	10.0kΩ,±0.5%,1/4W		
R 14	Var,MF,(RJ6P 100Ω)	100Ω,1/2W		
R 15	CF,(ARD25T121J)	120Ω,±5%,1/4W		
R 16	MF,(RN14K2E75R0D)	75.0Ω,±0.5%,1/4W		
R 17	Var,MF,(RJ-6P 100Ω)	100Ω,1/2W		
R 18	Var,MF,(RJ-6P 200Ω)	200Ω,1/2W		
R 19	Var,MF,(RJ-6P 500Ω)	500Ω,1/2W		
R 20	MF,(RN14K2E1052D)	10.5kΩ,±0.5%,1/4W		
R 21	MF,(RN14K2E1472D)	14.7kΩ,±0.5%,1/4W		
R 22	MF,(RN14K2E3012D)	30.1kΩ,±0.5%,1/4W		
R 23	MF,(RN14K2E1621D)	1.62kΩ,±0.5%,1/4W		
R 24	MF,(RN14K2E2800D)	280Ω,±0.5%,1/4W		
R 25	Var,MF,(RJ-6P 50Ω)	50Ω,1/2W		
R 26	Var,MF,(RJ-6P 50Ω)	50Ω,1/2W		
R 27	CF,(ARD25T224J)	220kΩ,±5%,1/4W		
R 28	CF,(ARD25T221J)	220Ω,±5%,1/4W		
R 29	CF,(ARD25T221J)	220Ω,±5%,1/4W		
R 30	CF,(ARD25T330J)	33Ω,±5%,1/4W		
R 31	Var,MF,(RJ-6P 50Ω)	50Ω,1/2W		
R 32	CF,(ARD25T221J)	220Ω,±5%,1/4W		
R 33	CF,(ARD25T152J)	1.5kΩ,±5%,1/4W		
R 34	CF,(ARD25T101J)	100Ω,±5%,1/4W		
R 35	MF,(RN14K2E1211D)	1.21kΩ,±0.5%,1/4W		
R 36	MF,(RN14K2E4530D)	453Ω,±0.5%,1/4W		
R 37	MF,(RN14K2E5900D)	590Ω,±0.5%,1/4W		
R 38	MF,(RN14K2E1211D)	1.21kΩ,±0.5%,1/4W		
R 39	MF,(RN14K2E1690D)	169Ω,±0.5%,1/4W		
R 40	Var,MF,(RJ-6P 20Ω)	20Ω,1/2W		

( ): Manufacturer's part number

* : Selected at factory

34W81253	5/7

COMPONENT LIST OF RF 1

CKT REF	DESCRIPTION	RATING		NOTE
R 41	CF,(ARD25T*J)	330Ω to 10kΩ,±5%, 1/4W		Q'ty 1 or 2 *,1.2k//620k
R 42	CF,(ARD25T101J)	100Ω,±5%,1/4W		
R 43	CF,(ARD25T182J)	1.8kΩ,±5%,1/4W		
R 44	CF,(ARD25T*J)	330Ω to 10kΩ,±5%,1/4W		* 22k
R 45	CF,(ARD25T620J)	62Ω,±5%,1/4W		
R 46	MF,(RN14K2E6190D)	619Ω,±0.5%,1/4W		
R 47	MF,(RN14K2E4750D)	475Ω,±0.5%,1/4W		
R 48	MF,(RN14K2E5900D)	590Ω,±0.5%,1/4W		
R 49	Var,MF,(RJ-6P 100Ω)	100Ω,1/2W		
R 50	CF,(ARD25T101J)	100Ω,±0.5%,1/4W		
R 51	CF,(ARD25T122J)	1.2kΩ,±5%,1/4W		
R 52	Var,MF,(RJ-6P 500Ω)	500Ω,1/2W		
R 53	MF,(RN14K2E1822D)	18.2kΩ,±0.5%,1/4W		
R 54	MF,(RN14K2E6810D)	681Ω,±0.5%,1/4W		
R 55	MF,(RN14K2E3400D)	340Ω,±0.5%,1/4W		
R 56	MF,(RN14K2E75R0)	75.0Ω,±0.5%,1/4W		
R 57	Var,MF,(RJ-6P 20Ω)	20Ω,1/2W		
R 58	CF,(ARD25T*J)	750Ω to 22kΩ,±5%,1/4W		Q'ty 1 or 2 * 1.5k// 3.3k * 6.8k
R 59	CF,(ARD25T*J)	5.6kΩ to 10kΩ,±5%, 1/4W		
R 60	MF,(RN14K2E4220D)	422Ω,±0.5%,1/4W		
R 61	CF,(ARD25T560J)	56Ω,±5%,1/4W		
R 62	CF,(ARD25T331J)	330Ω,±5%,1/4W		
R 63	CF,(ARD25T221J)	220Ω,±5%,1/4W		
R 64	CF,(ARD25T152J)	1.5kΩ,±5%,1/4W		
R 65	CF,(ARD25T271J)	270Ω,±5%,1/4W		
R 66	CF,(ARD25T101J)	100Ω,±5%,1/4W		
R 67	CF,(ARD25T333J)	33kΩ,±5%,1/4W		
R 68	CF,(ARD25T102J)	1kΩ,±5%,1/4W		
R 69	CF,(ARD25T681J)	680Ω,±5%,1/4W		
R 70	CF,(ARD25T151J)	150Ω,±5%,1/4W		
R 71	CF,(ARD25T221J)	220Ω,±5%,1/4W		
R 72	CF,(ARD25T122J)	1.2kΩ,±5%,1/4W		
R 73	CF,(ARD25T131J)	130Ω,±5%,1/4W		
R 74	CF,(ARD25T101J)	100Ω,±5%,1/4W		
R 75	CF,(ARD25T103J)	10kΩ,±5%,1/4W		
R 76	CF,(ARD25T222J)	2.2kΩ,±5%,1/4W		
R 77	CF,(ARD25T101J)	100Ω,±5%,1/4W		
R 78	CF,(ARD25T561J)	560Ω,±5%,1/4W		
R 79	CF,(ARD25T101J)	100Ω,±5%,1/4W		
R 80	CF,(ARD25T101J)	100Ω,±5%,1/4W		
R 81	CF,(ARD25T751J)	750Ω,±5%,1/4W		
R 82	CF,(ARD25T221J)	220Ω,±5%,1/4W		
R 83	CF,(ARD25T470J)	47Ω,±5%,1/4W		
R 84	CF,(ARD25T750J)	75Ω,±5%,1/4W		
R 85	CF,(ARD25T393J)	39kΩ,±5%,1/4W		

( ): Manufacturer's part number

* : Selected at factory

34W81253	6/7

COMPONENT LIST OF RF 1

CKT REF	DESCRIPTION	RATING		NOTE
R 86	MF,(NRN1/4C4 35.7ΩD)	35.7Ω,±0.5%,1/4W		
R 87	MF,(NRN1/4C4 332ΩD)	332Ω,±0.5%,1/4W		
R 88	MF,(NRN1/4C4 332ΩD)	332Ω,±0.5%,1/4W		
R 89	Single in-line array, (IHR-4-332JB)	3.3kΩ,1/8W		
R 90	Single in-line array, (IHR-4-332JB)	3.3kΩ,1/8W		
R 91	Single in-line array, (IHR-4-332JB)	3.3kΩ,1/8W		
R 92	Single in-line array, (IHR-4-332JB)	3.3kΩ,1/8W		
R 93	CF,(ARD25T332J)	3.3kΩ,±5%,1/4W		
R 94	CF,(ARD25T223J)	22kΩ,±5%,1/4W		
R 95	CF,(ARD25T222J)	2.2kΩ,±5%,1/4W		
R 96	MF,(LP1/8 330ΩGT52)	330Ω,±2%,1/8W		
R 97	Not assigned			
R 98	Not assigned			
R 99	Not assigned			
R 100	Not assigned			
R 101	Not assigned			
R 102	MF,(RN14K2E2000D)	200Ω,±0.5%,1/4W		
R 103	MF,(RN14K2E1741D)	1.74kΩ,±0.5%,1/4W		
R 104	MF,(NRN1/4C4 1.74ΩG)	1.74Ω,±2%,1/4W		
R 105	CF,(ARD25T103J)	10kΩ,±5%,1/4W		
R 106	CF,(ARD25T470J)	47Ω,±5%,1/4W		
R 107	MF,(RN14K2E4991D)	4.99kΩ,±0.5%,1/4W		
R 108	MF,(RN14K2E4991D)	4.99kΩ,±0.5%,1/4W		
R 109	MF,(NRN1/4C4 1.74ΩG)	1.74Ω,±2%,1/4W		
R 110	CF,(ARD25T103J)	10kΩ,±5%,1/4W		
R 111	CF,(ARD25T470J)	47Ω,±5%,1/4W		
R 112	CF,(ARD25T821J)	820Ω,±5%,1/4W		
R 113	MF,(RN14K2E2321D)	2.32kΩ,±0.5%,1/4W		
R 114	MF,(RN14K2E2491D)	2.49kΩ,±0.5%,1/4W		
R 115	Var,MF,(RJ-6P 200Ω)	200Ω,1/2W		
R 116	CF,(ARD25T224J)	220kΩ,±5%,1/4W		
R 117	CF,(ARD25T221J)	220Ω,±5%,1/4W		
R 118	CF,(ARD25T221J)	220Ω,±5%,1/4W		
R 119	CF,(ARD25T150J)	15Ω,±5%,1/4W		
R 120	Var,MF,(RJ-6P 50Ω)	50Ω,1/2W		
R 121	MF,(RN14K2E1431D)	1.43kΩ,±0.5%,1/4W		
R 122	MF,(RN14K2E1002D)	10.0kΩ,±0.5%,1/4W		
R 123	MF,(ARD25T100J)	10Ω,±5%,1/4W		
T 1	Trans,(339T13586)			
T 2	Trans,(339T12260B)			

( ): Manufacturer's part number

* : Selected at factory

34W81253	7/7

COMPONENT LIST OF RF 2

CKT REF	DESCRIPTION	RATING		NOTE
C 1	Cer,(CC924CH1H150J)	15pF,±5%,50V		
C 2	Cer,(CC924CJ1H030D)	3pF,±0.5pF,50V		
C 3	Cer,(RD340CK*CY50)	0.5 to 1pF,±0.25pF, 50V		Q'ty 0 or 1 *, 0P
C 4	Cer,(CC924CH1H050D)	5pF,±0.5pF,50V		
C 5	Cer,(CC924CH1H220J)	22pF,±5%,50V		
C 6	Cer,(CC924CH1H220J)	22pF,±5%,50V		
C 7	Cer,(CC924CH1H*D)	4 to 8pF,±0.5pF,50V		*, 7P
C 8	Cer,(CC924CH1H040D)	4pF,±0.5pF,50V		
C 9	Cer,(CC924CH1H330J)	33pF,±5%,50V		
C 10	Cer,(CC924CH1H100D)	10pF,±0.5pF,50V		
C 11	Cer,(CC924CH1H*D)	4 to 8pF,±0.5pF,50V		*, 6P
C 12	Cer,(CC924CH1H070D)	7pF,±0.5pF,50V		
C 13	Cer,(CC924CH1H300J)	30pF,±5%,50V		
C 14	Cer,(CC924CH1H200J)	20pF,±5%,50V		
C 15	Cer,(RD340CK*CY50)	0.5 to 1pF,±0.25pF, 50V		Q'ty 0 or 1, *, 0P
C 16	Cer,(RD340CK*CY50)	0.5 to 1pF,±0.25pF, 50V		*
C 17	Cer,(CC924CH1H150J)	15pF,±5%,50V		
C 18	Cer,(CC924CH1H150J)	15pF,±5%,50V		
C 19	Elect,(CE04W1E221)	220μF,±20%,25V		
C 20	Elect,(CE04W1E470)	47μF,±20%,25V		
C 21	Elect,(CE04W1E221)	220μF,±20%,25V		
C 22	Cer,(CC924CJ1H030C)	3pF,±0.25pF,50V		
C 23	Cer,(RD340CK0R5CY50)	0.5pF,±0.25pF,50V		
C 24	Elect,(CE04W1E221)	220μF,±20%,25V		
C 25	Elect,(CE04W1E221)	220μF,±20%,25V		
C 26	Tant,(CS02H0J331M)	330μF,±20%,500V		Q'ty 3, Paralell
C 27	Cer,(RD340CK*CY50)	0 to 1PF,±0.25pF,50V		*, 0pF
C 28	Cer,(CK924C1H103M)	0.01μF,±20%,50V		
C 29	Cer,(CK924C1H103M)	0.01μF,±20%,50V		
C 30	Cer,(CK924C1H103M)	0.01μF,±20%,50V		
C 31	Cer,(CK924C1H103M)	0.01μF,±20%,50V		
C 32	Cer,(CK924C1H103M)	0.01μF,±20%,50V		
C 33	Cer,(CK924C1H103M)	0.01μF,±20%,50V		
C 34	Cer,(CC924CH1H100D)	10pF,±0.5pF,50V		
C 35	Cer,(CK924C1H103M)	0.01μF,±20%,50V		
L 1	Coil,(342T55666B)	0.72μH		
L 2	Coil,(342T55666A)	0.67μH		
L 3	Coil,(342T55666C)	0.74μH		
L 4	Coil,(342T55666D)	0.83μH		
L 5	Microinductor, (LF8-101K)	100μH		

( ): Manufacturer's part number

* : Selected at factory

34W81254	1/3

COMPONENT LIST OF RF 2

CKT REF	DESCRIPTION	RATING		NOTE
L 6	Microinductor, (LF8-101K)	100μH		
L 7	Microinductor, (LF8-101K)	100μH		
Q 1	Tr,Si,NPN,(2SC2369)			
Q 2	Tr,Si,PNP,(2SA711)			
Q 3	Tr,Si,NPN,(2SC943)			
Q 4	Tr,Si,NPN,(2SC2369)			
Q 5	Tr,Si,NPN,(2SC2369)			
Q 6	Tr,Si,PNP,(2SA711)			
Q 7	Tr,Si,NPN,(2SC2369)			
Q 8	Not assigned			
Q 9	IC,(MC5156)			
R 1	CF,(ARD25T151J)	150Ω,±5%,1/4W		
R 2	Var,MF,(RJ-6P 2kΩ)	2kΩ,1/2W		
R 3	CF,(ARD25T472J)	4.7kΩ,±5%,1/4W		
R 4	CF,(ARD25T101J)	100Ω,±5%,1/4W		
R 5	CF,(ARD25T331J)	330Ω,±5%,1/4W		
R 6	CF,(ARD25T681J)	680Ω,±5%,1/4W		
R 7	CF,(ARD25T101J)	100Ω,±5%,1/4W		
R 8	CF,(ARD25T561J)	560Ω,±5%,1/4W		
R 9	CF,(ARD25T331J)	330Ω,±5%,1/4W		
R 10	CF,(ARD25T*J)	3.3k to 470kΩ,±5%, 1/4W		*, 10K
R 11	CF,(ARD25T470J)	47Ω,±5%,1/4W		
R 12	CF,(ARD25T102J)	1kΩ,±5%,1/4W		
R 13	CF,(ARD25T332J)	3.3kΩ,±5%,1/4W		
R 14	CF,(ARD25T391J)	390Ω,±5%,1/4W		
R 15	CF,(ARD25T471J)	470Ω,±5%,1/4W		
R 16	CF,(ARD25T750J)	75Ω,±5%,1/4W		
R 17	CF,(ARD25T560J)	56Ω,±5%,1/4W		
R 18	CF,(ARD25T820J)	82Ω,±5%,1/4W		
R 19	CF,(ARD25T102J)	1kΩ,±5%,1/4W		
R 20	CF,(ARD25T472J)	4.7kΩ,±5%,1/4W		
R 21	Not assigned			
R 22	CF,(ARD25T511J)	510Ω,±5%,1/4W		
R 23	Not assigned			
R 24	CF,(ARD25T121J)	120Ω,±5%,1/4W		
R 25	CF,(ARD25T181J)	180Ω,±5%,1/4W		

( ): Manufacturer's part number

* : Selected at factory

34W81254	2/3

COMPONENT LIST OF RF 2

CKT REF	DESCRIPTION	RATING		NOTE
R 26	CF,(ARD25T330J)	33Ω,±5%,1/4W		
R 27	CF,(ARD25T331J)	330Ω,±5%,1/4W		
R 28	CF,(ARD25T471J)	470Ω,±5%,1/4W		
R 29	CF,(ARD25T391J)	390Ω,±5%,1/4W		
R 30	CF,(ARD25T101J)	100Ω,±5%,1/4W		
R 31	CF,(ARD25T331J)	330Ω,±5%,1/4W		
R 32	CF,(ARD25T750J)	75Ω,±5%,1/4W		
T 1	Trans,(342T74414)			
Z 1	M8 Mixer			

( ): Manufacturer's part number

* : Selected at factory

34W81254	3/3

COMPONENT LIST OF CAL

CKT REF	DESCRIPTION	RATING		NOTE
C 1	Cer,(CC92CH1H470JY)	47pF,±5%,50V		
C 2	Cer,(CC92CH1H330JY)	33pF,±5%,50V		
C 3	Cer,(CC92CH1H150JY)	15pF,±5%,50V		
C 4	Plast,(ECQ-M05 102KZ)	1000pF,±10%,50V		
C 5	Plast,(ECQ-M05 102KZ)	1000pF,±10%,50V		
C 6	Plast,(ECQ-M05 102KZ)	1000pF,±10%,50V		
C 7	Plast,(ECQ-M05 102KZ)	1000pF,±10%,50V		
C 8	Plast,(ECQ-M05 102KZ)	1000pF,±10%,50V		
C 9	Elect,(SM25VB-220)	220μF,+50/-10%,25V		
C 10	Plast,(ECQ-M05 102KZ)	1000pF,±10%,50V		
C 11	Cer,(CC92CH1H101JY)	100pF,±5%,50V		
C 12	Cer,(CC92CH1H101JY)	100pF,±5%,50V		
C 13	Cer,(CC92CH1H101JY)	100pF,±5%,50V		
C 14	Cer,(CC92CH1H101JY)	100pF,±5%,50V		
C 15	Cer,(CC92CH1H101JY)	100pF,±5%,50V		
C 16	Tant,(CS02H1D2R2M)	2.2μF,±20%,20V		
C 17	Plast,(ECQ-M05 102KZ)	1000pF,±10%,50V		
C 18	Plast,(ECQ-M05 103KZ)	0.01μF,±10%,50V		
C 19	Plast,(ECQ-M05 102KZ)	1000pF,±10%,50V		
C 20	Plast,(ECQ-M05 102KZ)	1000pF,±10%,50V		
C 21	Plast,(ECQ-M05 102KZ)	1000pF,±10%,50V		
C 22	Plast,(ECQ-M05 102KZ)	1000pF,±10%,50V		
C 23	Cer,(CC92CH1H330JY)	33pF,±5%,50V		
C 24	Cer,(CC92CH1H680JY)	68pF,±5%,50V		
C 25	Cer,(CC92CH1H680JY)	68pF,±5%,50V		
C 26	Cer,(CC92CH1H330JY)	33pF,±5%,50V		
C 27	Plast,(ECQ-M05 102KZ)	1000pF,±10%,50V		
C 28	Plast,(ECQ-M05 102KZ)	1000pF,±10%,50V		
C 29	Plast,(ECQ-M05 102KZ)	1000pF,±10%,50V		
C 30	Plast,(ECQ-M05 102KZ)	1000pF,±10%,50V		
C 31	Cer,(CC92CH1H101JY)	100pF,±5%,50V		
C 32	Cer,(RD312CH151JY50)	150pF,±5%,50V		
C 33	Cer,(RD312CH151JY50)	150pF,±5%,50V		
C 34	Cer,(CC92CH1H101JY)	100pF,±5%,50V		
C 35	Elect,(SM25VB-22)	22μF,+50/-10%,25V		
C 36	Elect,(SM25VB-22)	22μF,+50/-10%,25V		
C 37	Elect,(SM25VB-100)	100μF,+50/-10%,25V		
C 38	Elect,(SM25VB-100)	100μF,+50/-10%,25V		
C 39	Plast,(ECQ-M05 473KZ)	0.047μF,±10%,50V		
C 40	Elect,(SM25VB-220)	220μF,+50/-10%,25V		
C 41	Elect,(SM25VB-220)	220μF,+50/-10%,25V		
C 42	Cer,(CC92CH1H030CY)	3pF,±0.25pF,50V		
C 43	Elect,(SM25VB-220)	220μF,+50/-10%,25V		
C 44	Cer,(CC92CH1H040DY)	4pF,±0.5pF,50V		
C 45	Tant,(CS02H1D470M)	47μF,±20%,20V		

( ): Manufacturer's part number

* : Selected at factory

34W81259	1/7

COMPONENT LIST OF CAL

CKT REF	DESCRIPTION	RATING		NOTE
C 46	Tant,(CS02H0J470M)	47μF,±20%,6.3V		
C 47	Tant,(CS02H1C220M)	22μF,±20%,16V		
C 48	Elect,(SM25VB-220)	220μF,+50/-10%,25V		
C 49	Elect,(SM25VB-220)	220μF,+50/-10%,25V		
C 50	Elect,(SM25VB-100)	100μF,+50/-10%,25V		
C 51	Not assigned			
C 52	Tant,(CS02H1C220M)	22μF,±20%,16V		
C 53	Tant,(CS02H1VR22M)	0.22μF,±20%,35V		
C 54	Tant,(CS02H1VR22M)	0.22μF,±20%,35V		
C 55	Elect, (CA92C1C1R000R56)	1μF,16V		
C 56	Elect, (CA92C1C1R000R56)	1μF,16V		
C 57	Elect,(SM25VB-220)	220μF,+50/-10%,25V		
C 58	Elect,(SM25VB-220)	220μF,+50/-10%,25V		
C 59	Elect,(SM25VB-220)	220μF,+50/-10%,25V		
C 60	Elect,(SM25VB-220)	220μF,+50/-10%,25V		
C 61	Plast,(ECQ-M05 223KZ)	0.022μF,±10%,50V		
C 62	Tant,(CS02H1VR47M)	0.47μF,±20%,35V		
C 63	Tant,(CS02H1VR47M)	0.47μF,±20%,35V		
C 64	Tant,(CS02H1VR47M)	0.47μF,±20%,35V		
C 65	Tant,(CS02H1VR47M)	0.47μF,±20%,35V		
C 66	Plast,(ECQ-M05 103KZ)	0.01μF,±10%,50V		
C 67	Tant,(CS02H1C220M)	22μF,±20%,16V		
C 68	Tant,(CS02H1D2R2M)	2.2μF,±20%,20V		
C 69	Elect, (CA92C1C1R000R56)	1μF,16V		
C 70	Elect, (CA92C1C1R000R56)	1μF,16V		
C 71	Cer,(CC92CH1H100DY)	10pF,±0.5pF,50V		
C 72	Cer,(CC92CH1H100DY)	10pF,±0.5pF,50V		
C 73	Plast,(ECQ-M05 102KZ)	1000pF,±10%,50V		
C 74	Plast,(ECQ-M05 102KZ)	1000pF,±10%,50V		
C 75	Plast,(ECQ-M05 102KZ)	1000pF,±10%,50V		
C 76	Elect,(CE04W1V220)	22μF,±20%,35V		
K 1	Relay,(NR-SD-12V)			
K 2	Relay,(NR-SD-12V)			
K 3	Relay,(NR-SD-12V)			
L 1	Coil,(SP0408-1R0K)	1μH		
L 2	Microinductor, (LH1-102K)	1mH		
L 3	Coil,(SP0408-R22K)	0.22μH		

( ): Manufacturer's part number

* : Selected at factory

34W81259 2/7

COMPONENT LIST OF CAL

CKT REF	DESCRIPTION	RATING		NOTE
L 4	Coil,(SP0408-R33K)	0.33μH		
L 5	Coil,(SP0408-R22K)	0.22μH		
L 6	Microinductor, (LF8-100K)	10μH		
L 7	Coil,(SP0408-R47K)	0.47μH		
L 8	Coil,(SP0408-R47K)	0.47μH		
L 9	Coil,(SP0408-R47K)	0.47μH		
L 10	Not assigned			
L 11	Microinductor, (LF8-221K)	220μH		
L 12	Microinductor, (LF1-102K)	1mH		
L 13	Microinductor, (LF1-102K)	1mH		
L 14	Microinductor, (LF8-221K)	220μH		
L 15	Microinductor, (LF8-221K)	220μH		
L 16	Coil,(SP0408-1R0K)	1μH		
L 17	Coil,(SP0408-1R0K)	1μH		
Q 1	Di,Si,(1S2208)			
Q 2	Tr,Si,NPN,(2SC943)			
Q 3	Tr,Si,NPN,(2SC2369)			
Q 4	Tr,Si,PNP,(2SA711)			
Q 5	Di,Si,(1SS97)			
Q 6	Di,Si,(1SS97)			
Q 7	Di,Si,(1SS97)			
Q 8	Di,Si,(1SS97)			
Q 9	IC,(μPC157C)			
Q 10	IC,(74S02)			
Q 11	J-FET,N ch,(3SK59GR)			
Q 12	Tr,Si,NPN,(2SC2369)			
Q 13	Tr,Si,PNP,(2SA711)			
Q 14	Tr,Si,NPN,(2SC2369)			
Q 15	Tr,Si,NPN,(2SC2369)			
Q 16	Tr,Si,PNP,(2SA711)			
Q 17	Tr,Si,NPN,(2SC2369)			
Q 18	Tr,Si,PNP,(2SA711)			
Q 19	Tr,Si,PNP,(2SA711)			
Q 20	Tr,Si,NPN,(2SC2369)			
Q 21	Tr,Si,NPN,(2SC1253)			
Q 22	Tr,Si,NPN,(2SC1253)			
Q 23	Di,Si,(1S953)			

( ): Manufacturer's part number

* : Selected at factory

34W81259	3/7

COMPONENT LIST OF CAL

CKT REF	DESCRIPTION	RATING		NOTE
Q 24	Tr,Si,PNP,(2SA603)			
Q 25	Tr,Si,NPN,(2SC2369)			
Q 26	Tr,Si,NPN,(2SC943)			
Q 27	Di,Si,(1SS99)			
Q 28	Di,Si,(1SS99)			
Q 29	IC,(μPC154A)			
Q 30	Di,breakdown,(RD3.9EB)	3.7 to 4.1V,400mW		
Q 31	IC,(LM337T)			
Q 32	IC,(LM337T)			
Q 33	IC,(LM317T)			
Q 34	Di,breakdown,(1SZ52)	5.9 to 6.5V,250mW		
Q 35	IC,(74LS290)			
Q 36	Tr,Si,NPN,(2SC2369)			
Q 37	Di,Si,(1S953)			
Q 38	Di,Si,(1S953)			
R 1	CF,(ARD25T103J)	10kΩ,±5%,1/4W		
R 2	CF,(ARD25T103J)	10kΩ,±5%,1/4W		
R 3	CF,(ARD25T103J)	10kΩ,±5%,1/4W		
R 4	CF,(ARD25T561J)	560Ω,±5%,1/4W		
R 5	CF,(ARD25T181J)	180Ω,±5%,1/4W		
R 6	CF,(ARD25T182J)	1.8kΩ,±5%,1/4W		
R 7	CF,(ARD25T471J)	470Ω,±5%,1/4W		
R 8	CF,(ARD25T221J)	220Ω,±5%,1/4W		
R 9	CF,(ARD25T272J)	2.7kΩ,±5%,1/4W		
R 10	CF,(ARD25T101J)	100Ω,±5%,1/4W		
R 11	CF,(ARD25T103J)	10kΩ,±5%,1/4W		
R 12	CF,(ARD25T122J)	1.2kΩ,±5%,1/4W		
R 13	CF,(ARD25T331J)	330Ω,±5%,1/4W		
R 14	CF,(ARD25T102J)	1kΩ,±5%,1/4W		
R 15	CF,(ARD25T393J)	39kΩ,±5%,1/4W		
R 16	CF,(ARD25T332J)	3.3kΩ,±5%,1/4W		
R 17	CF,(ARD25T332J)	3.3kΩ,±5%,1/4W		
R 18	CF,(ARD25T103J)	10kΩ,±5%,1/4W		
R 19	Var,MF,(RJ-6P 1kΩ)	1kΩ,1/2W		
R 20	CF,(ARD25T102J)	1kΩ,±5%,1/4W		
R 21	CF,(ARD25T104J)	100kΩ,±5%,1/4W		
R 22	CF,(ARD25T473J)	47kΩ,±5%,1/4W		
R 23	CF,(ARD25T221J)	220Ω,±5%,1/4W		
R 24	CF,(ARD25T562J)	5.6kΩ,±5%,1/4W		
R 25	CF,(ARD25T221J)	220Ω,±5%,1/4W		
R 26	CF,(ARD25T681J)	680Ω,±5%,1/4W		
R 27	CF,(ARD25T101J)	100Ω,±5%,1/4W		
R 28	CF,(ARD25T123J)	12kΩ,±5%,1/4W		
R 29	CF,(ARD25T332J)	3.3kΩ,±5%,1/4W		
R 30	CF,(ARD25T331J)	330Ω,±5%,1/4W		

( ): Manufacturer's part number

* : Selected at factory

34W81259	4/7

COMPONENT LIST OF CAL

CKT REF	DESCRIPTION	RATING		NOTE
R 31	CF,(ARD25T101J)	100Ω,±5%,1/4W		
R 32	CF,(ARD25T750J)	75Ω,±5%,1/4W		
R 33	CF,(ARD25T181J)	180Ω,±5%,1/4W		
R 34	CF,(ARD25T101J)	100Ω,±5%,1/4W		
R 35	CF,(ARD25T750J)	75Ω,±5%,1/4W		
R 36	CF,(ARD25T102J)	1kΩ,±5%,1/4W		
R 37	CF,(ARD25T331J)	330Ω,±5%,1/4W		
R 38	CF,(ARD25T101J)	100Ω,±5%,1/4W		
R 39	CF,(ARD25T682J)	6.8kΩ,±5%,1/4W		
R 40	CF,(ARD25T392J)	3.9kΩ,±5%,1/4W		
R 41	CF,(ARD25T151J)	150Ω,±5%,1/4W		
R 42	CF,(ARD25T101J)	100Ω,±5%,1/4W		
R 43	CF,(ARD25T101J)	100Ω,±5%,1/4W		
R 44	CF,(ARD25T750J)	75Ω,±5%,1/4W		
R 45	CF,(ARD25T122J)	1.2kΩ,±5%,1/4W		
R 46	CF,(ARD25T103J)	10kΩ,±5%,1/4W		
R 47	CF,(ARD25T181J)	180Ω,±5%,1/4W		
R 48	CF,(ARD25T331J)	330Ω,±5%,1/4W		
R 49	CF,(ARD25T101J)	100Ω,±5%,1/4W		
R 50	CF,(ARD25T621J)	620Ω,±5%,1/4W		
R 51	CF,(ARD25T560J)	56Ω,±5%,1/4W		
R 52	CF,(ARD25T101J)	100Ω,±5%,1/4W		
R 53	CF,(ARD25T222J)	2.2kΩ,±5%,1/4W		
R 54	CF,(ARD25T101J)	100Ω,±5%,1/4W		
R 55	CF,(ARD25T330J)	33Ω,±5%,1/4W		
R 56	CF,(ARD25T331J)	330Ω,±5%,1/4W		
R 57	CF,(ARD25T330J)	33Ω,±5%,1/4W		
R 58	CF,(ARD25T331J)	330Ω,±5%,1/4W		
R 59	CF,(ARD25T102J)	1kΩ,±5%,1/4W		
R 60	CF,(ARD25T101J)	100Ω,±5%,1/4W		
R 61	CF,(ARD25T101J)	100Ω,±5%,1/4W		
R 62	CF,(ARD25T151J)	150Ω,±5%,1/4W		
R 63	CF,(ARD25T102J)	1kΩ,±5%,1/4W		
R 64	CF,(ARD25T101J)	100Ω,±5%,1/4W		
R 65	CF,(ARD25T821J)	820Ω,±5%,1/4W		
R 66	CF,(ARD25T151J)	150Ω,±5%,1/4W		
R 67	CF,(ARD25T681J)	680Ω,±5%,1/4W		
R 68	CF,(ARD25T330J)	33Ω,±5%,1/4W		
R 69	CF,(ARD25T151J)	150Ω,±5%,1/4W		
R 70	CF,(ARD25T101J)	100Ω,±5%,1/4W		
R 71	CF,(ARD25T222J)	2.2kΩ,±5%,1/4W		
R 72	CF,(ARD25T152J)	1.5kΩ,±5%,1/4W		
R 73	MF,(RN14K2E75R0D)	75Ω,±0.5%,1/4W		
R 74	CF,(ARD25T102J)	1kΩ,±5%,1/4W		
R 75	MF,(RN14K2E1500D)	150Ω,±0.5%,1/4W		

( ): Manufacturer's part number

* : Selected at factory

34W81259	5/7

COMPONENT LIST OF CAL

CKT REF	DESCRIPTION	RATING		NOTE
R 76	CF,(ARD25T103J)	10kΩ,±5%,1/4W		
R 77	CF,(ARD25T153J)	15kΩ,±5%,1/4W		
R 78	CF,(ARD25T392J)	3.9kΩ,±5%,1/4W		
R 79	CF,(ARD25T121J)	120Ω,±5%,1/4W		
R 80	CF,(ARD25T331J)	330Ω,±5%,1/4W		
R 81	CF,(ARD25T331J)	330Ω,±5%,1/4W		
R 82	CF,(ARD25T101J)	100Ω,±5%,1/4W		
R 83	Not assigned			
R 84	CF,(ARD25T100J)	10Ω,±5%,1/4W		
R 85	MF,(RN14K2E1000D)	100Ω,±0.5%,1/4W		
R 86	MF,(RN14K2E1000D)	100Ω,±0.5%,1/4W		
R 87	MF,(RN14K2E1002D)	10.0kΩ,±0.5%,1/4W		
R 88	MF,(RN14K2E1002D)	10.0kΩ,±0.5%,1/4W		
R 89	MF,(RN14K2E1002D)	10.0kΩ,±0.5%,1/4W		
R 90	MF,(RN14K2E1002D)	10.0kΩ,±0.5%,1/4W		
R 91	MF,(RN14K2E2152D)	21.5kΩ,±0.5%,1/4W		
R 92	MF,(RN14K2E2152D)	21.5kΩ,±0.5%,1/4W		
R 93	MF,(RN14K2E2152D)	21.5kΩ,±0.5%,1/4W		
R 94	MF,(RN14K2E1001D)	1.00kΩ,±0.5%,1/4W		
R 95	Var,MF,(RJ-6P 200Ω)	200Ω,1/2W		
R 96	CF,(ARD25T122J)	1.2kΩ,±5%,1/4W		
R 97	CF,(ARD25T100J)	10Ω,±5%,1/4W		
R 98	CF,(ARD25T390J)	39Ω,±5%,1/4W		
R 99	CF,(ARD25T472J)	4.7kΩ,±5%,1/4W		
R 100	MF,(RN14K2E2000D)	200Ω,±0.5%,1/4W		
R 101	MF,(RN14K2E1741D)	1.74kΩ,±0.5%,1/4W		
R 102	MF,(RN14K2E2000D)	200Ω,±0.5%,1/4W		
R 103	MF,(RN14K2E2211D)	2.21kΩ,±0.5%,1/4W		
R 104	MF,(RN14K2E2000D)	200Ω,±0.5%,1/4W		
R 105	MF,(RN14K2E1401D)	1.40kΩ,±0.5%,1/4W		
R 106	CF,(ARD25T151J)	150Ω,±5%,1/4W		
R 107	CF,(ARD25T821J)	820Ω,±5%,1/4W		
R 108	CF,(ARD25T101J)	100Ω,±5%,1/4W		
R 109	CF,(ARD25T472J)	4.7kΩ,±5%,1/4W		
R 110	CF,(ARD25T103J)	10kΩ,±5%,1/4W		
R 111	CF,(ARD25T101J)	100Ω,±5%,1/4W		
R 112	CF,(ARD25T102J)	1kΩ,±5%,1/4W		
R 113	CF,(ARD25T101J)	100Ω,±5%,1/4W		
R 114	Not assigned			
R 115	CF,(RN14K2E75R0D)	75.0Ω,±0.5%,1/4W		
T 1	Trans,(342T69294)			

( ): Manufacturer's part number

* : Selected at factory

34W81259	6/7

COMPONENT LIST OF CAL

CKT REF	DESCRIPTION	RATING		NOTE
X 1	XTAL OSC,(NC-18C)	56.6MHz		
Z 1	M8 Mixer			

( ): Manufacturer's part number

* : Selected at factory

34W81259	7/7

COMPONENT LIST OF IF 1

CKT REF	DESCRIPTION	RATING		NOTE
C 1	Cer,(CK924C1H103M)	0.01μF,±20%,50V		
C 2	Cer,(CK924C1H103M)	0.01μF,±20%,50V		
C 3	Cer,(CK924C1H103M)	0.01μF,±20%,50V		
C 4	Cer,(CK924C1H103M)	0.01μF,±20%,50V		
C 5	Cer,(CK924C1H103M)	0.01μF,±20%,50V		
C 6	Not assigned			
C 7	Not assigned			
C 8	Not assigned			
C 9	Elect,(CE04W1V220)	22μF,±20%,35V		
C 10	Elect,(CE04W1V220)	22μF,±20%,35V		
C 11	Cer,(CK924C1H103M)	0.01μF,±20%,50V		
C 12	Cer,(CK924C1H103M)	0.01μF,±20%,50V		
C 13	Cer,(CK924C1H103M)	0.01μF,±20%,50V		
C 14	Cer,(CK924C1H103M)	0.01μF,±20%,50V		
C 15	Not assigned			
C 16	Plast,(ECQ-P1 162FZ)	1600pF,±1%,100V		
C 17	Plast,(ECQ-P1 162FZ)	1600pF,±1%,100V		
C 18	Cer,(CC924CH1H470J)	47pF,±5%,50V		
C 19	Plast,(ECQ-M1H 104KZ)	0.1μF,±10%,50V		
C 20	Plast,(ECQ-M1H 103KZ)	0.01μF,±10%,50V		
C 21	Plast,(QS04 1540pF±1% 50WV)	1540pF,±1%,50V		
C 22	Plast,(QS04 1100pF±1% 50WV)	1100pF,±1%,50V		
C 23	Plast,(QS04 750pF±1% 50WV)	750pF,±1%,50V		
C 24	Plast,(QS04 3650pF±1% 50WV)	3650pF,±1%,50V		
C 25	Plast,(QS04 2870pF±1% 50WV)	2870pF,±1%,50V		
C 26	Plast,(QS04 2370pF±1% 50WV)	2370pF,±1%,50V		
C 27	Plast,(QS04 3650pF±1% 50WV)	3650pF,±1%,50V		
C 28	Plast,(QS04 2370pF±1% 50WV)	2370pF,±1%,50V		
C 29	Plast,(QS04 1870pF±1% 50WV)	1870pF,±1%,50V		
C 30	Plast,(QS04 4640pF±1% 50WV)	4640pF,±1%,50V		
C 31	Cer,(RPE111CH821G50)	820pF,±2%,50V		
C 32	Cer,(RPE111CH681G50)	680pF,±2%,50V		
C 33	Cer,(RPE111CH751G50)	750pF,±2%,50V		
C 34	Cer,(RPE111CH471G50)	470pF,±2%,50V		
C 35	Cer,(RPE111CH681G50)	680pF,±2%,50V		
C 36	Cer,(RPE111CH821G50)	820pF,±2%,50V		
C 37	Cer,(RPE111CH301G50)	300pF,±2%,50V		
C 38	Cer,(RPE111CH361G50)	360pF,±2%,50V		

( ): Manufacturer's part number

* : Selected at factory

34W81255	1/15

COMPONENT LIST OF IF 1

CKT REF	DESCRIPTION	RATING		NOTE
C 39	Cer,(RPE111CH511G50)	510pF,±2%,50V		
C 40	Cer,(CC924CH1H300J)	30pF,±5%,50V		
C 41	Cer,(RPE111CH511G50)	510pF,±2%,50V		
C 42	Cer,(RPE111CH391G50)	390pF,±2%,50V		
C 43	Cer,(RPE111CH511G50)	510pF,±2%,50V		
C 44	Cer,(QS04 2370pF±1% 50WV)	2370pF,±1%,50V		
C 45	Cer,(CK924C1H104M)	0.1μF,±20%,50V		
C 46	Cer,(CK924C1H104M)	0.1μF,±20%,50V		
C 47	Cer,(CK924C1H103M)	0.01μF,±20%,50V		
C 48	Cer,(CC924CH1H101J)	100pF,±5%,50V		
C 49	Elect,(CE04W1V220)	22μF,±20%,35V		
C 50	Elect,(CE04W1V220)	22μF,±20%,35V		
C 51	Plast,(ECQ-P1 153FZ)	0.015μF,±1%,100V		
C 52	Plast,(ECQ-P1 273FZ)	0.027μF,±1%,100V		
C 53	Plast,(ECQ-P1 153FZ)	0.015μF,±1%,100V		
C 54	Not assigned			
C 55	Elect,(CE04W1V220)	22μF,±20%,35V		
C 56	Elect,(CE04W1V220)	22μF,±20%,35V		
C 57	Cer,(CC924CH1H150J)	15pF,±5%,50V		
C 58	Cer,(CC924CH1H090D)	9pF,±0.5pF,50V		
C 59	Cer,(CC924CH1H090D)	9pF,±0.5pF,50V		
C 60	Plast,(ECQ-M1H 104KZ)	0.1μF,±10%,50V		
C 61	Plast,(ECQ-M1H 103KZ)	0.01μF,±10%,50V		
C 62	Elect,(CE04W1V220)	22μF,±20%,35V		
C 63	Cer,(RPE111CH561G50)	560pF,±2%,50V		
C 64	Cer,(RPE111CH561G50)	560pF,±2%,50V		
C 65	Cer,(QS04 6650pF±1% 50WV)	6650pF,±1%,50V		
C 66	Cer,(QS04 2870pF±1% 50WV)	2870pF,±1%,50V		
C 67	Cer,(QS04 787pF±1% 50WV)	787pF,±1%,50V		
C 68	Cer,(QS04 2870pF±1% 50WV)	2870pF,±1%,50V		
C 69	Cer,(QS05 301pF±1% 50WV)	301pF,±1%,50V		
C 70	Cer,(QS04 1270pF±1% 50WV)	1270pF,±1%,50V		
C 71	Cer,(QS04 1100pF±1% 50WV)	1100pF,±1%,50V		
C 72	Cer,(QS04 5600pF±1% 50WV)	5600pF,±1%,50V		
C 73	Cer,(QS04 909pF±1% 50WV)	909pF,±1%,50V		
C 74	Cer,(QS04 2870pF±1% 50WV)	2870pF,±1%,50V		
C 75	Cer,(QS04 787pF±1% 50WV)	787pF,±1%,50V		

( ): Manufacturer's part number

* : Selected at factory

34W81255 2/15

COMPONENT LIST OF IF 1

CKT REF	DESCRIPTION	RATING		NOTE
C 76	Cer,(QS04 1870pF±1% 50WV)	1870pF,±1%,50V		
C 77	Cer,(QS04 301pF±1%50WV)	301pF,±1%,50V		
C 78	Cer,(QS04 4640pF±1% 50WV)	4640pF,±1%,50V		
C 79	Cer,(QS04 787pF±1%50WV)	787pF,±1%,50V		
C 80	Cer,(CC924CH1H272J)	2700pF,±5%,50V		
C 81	Cer,(RPE111CH161G50)	160pF,±2%,50V		
C 82	Cer,(RPE111CH621G50)	620pF,±2%,50V		
C 83	Cer,(RPE111CH361G50)	360pF,±2%,50V		
C 84	Cer,(CC924CH1H120J)	12pF,±5%,50V		
C 85	Cer,(RPE111CH621G50)	620pF,±2%,50V		
C 86	Cer,(RPE111CH221G50)	220pF,±2%,50V		
C 87	Cer,(RPE111CH201G50)	200pF,±2%,50V		
C 88	Cer,(RPE111CH561G50)	560pF,±2%,50V		
C 89	Cer,(RPE111CH751G50)	750pF,±2%,50V		
C 90	Cer,(RPE111CH621G50)	620pF,±2%,50V		
C 91	Cer,(RPE111CH621G50)	620pF,±2%,50V		
C 92	Cer,(RPE111CH101G50)	100pF,±2%,50V		
C 93	Cer,(RPE111CH681G50)	680pF,±2%,50V		
C 94	Cer,(RPE111CH621G50)	620pF,±2%,50V		
C 95	Not assigned			
C 96	Elect,(CE04W1V220)	22μF,±20%,35V		
C 97	Plast,(ECQ-M1H 102KZ)	1000pF,±10%,50V		
C 98	Elect,(CE04W1V220)	22μF,±20%,35V		
C 99	Elect,(CE04W1V220)	22μF,±20%,35V		
C 100	Cer,(CC924CH1H820J)	82pF,±5%,50V		
C 101	Cer,(CC924CH1H150J)	15pF,±5%,50V		
C 102	Cer,(CC924CH1H070D)	7pF,±0.5pF,50V		
C 103	Cer,(CC924CH1H070D)	7pF,±0.5pF,50V		
C 104	Plast,(ECQ-M1H 104KZ)	0.1μF,±10%,50V		
C 105	Elect,(CE04W1V220)	22μF,±20%,35V		
C 106	Elect,(CE04W1V220)	22μF,±20%,35V		
C 107	Cer,(QS04 10000pF±1% 50WV)	0.01μF,±1%,50V		
C 108	Cer,(QS04 10000pF±1% 50WV)	0.01μF,±1%,50V		
C 109	Cer,(CK924C1H102M)	1000pF,±20%,50V		
C 110	Not assigned			
C 111	Cer,(CC924CH1H750J)	75pF,±5%,50V		
C 112	Plast,(ECQ-M1H 104KZ)	0.1μF,±10%,50V		
C 113	Cer,(QS04 10000pF±1% 50WV)	0.01μF,±1%,50V		
C 114	Elect,(CE04W1V220)	22μF,±20%,35V		
C 115	Elect,(CE04W1V220)	22μF,±20%,35V		
C 116	Cer,(CC924CH1H750J)	75pF,±5%,50V		
C 117	Plast,(ECQ-M1H 104KZ)	0.1μF,±10%,50V		

( ): Manufacturer's part number

* : Selected at factory

34W81255 3/15

CONPONENT LIST OF IF 1

CKT REF	DESCRIPTION	RATING		NOTE
C 118	Cer,(CC924CH1H910J)	91pF,±5%,50V		
C 119	Cer,(CC924CH1H150J)	15pF,±5%,50V		
C 120	Cer,(CC924CH1H090D)	9pF,±0.5pF,50V		
C 121	Cer,(CC924CH1H090D)	9pF,±0.5pF,50V		
C 122	Elect,(CE04W1V220)	22μF,±20%,35V		
C 123	Elect,(CE04W1V220)	22μF,±20%,35V		
C 124	Elect,(CE04W1V220)	22μF,±20%,35V		
C 125	Elect,(CE04W1V220)	22μF,±20%,35V		
C 126	Elect,(CE04W1V220)	22μF,±20%,35V		
C 127	Elect,(CE04W1V220)	22μF,±20%,35V		
C 128	Elect,(CE04W1V220)	22μF,±20%,35V		
C 129	Elect,(CE04W1V220)	22μF,±20%,35V		
C 130	Not assigned			
C 131	Cer,(CK924C1H103M)	0.01μF,±20%,50V		
C 132	Cer,(CK924C1H103M)	0.01μF,±20%,50V		
C 133	Elect,(CE04W1V220)	22μF,±20%,35V		
C 134	Elect,(CE04W1V220)	22μF,±20%,35V		
C 135	Elect,(CE04W1V220)	22μF,±20%,35V		
C 136	Cer,(CK924C1H103M)	0.01μF,±20%,50V		
C 137	Cer,(RPE111CH131G50)	130pF,±2%,50V		
C 138	Elect,(CE04W1V220)	22μF,±20%,35V		
C 139	Elect,(CE04W1V220)	22μF,±20%,35V		
C 140	Elect,(CE04W1V220)	22μF,±20%,35V		
C 141	Elect,(CE04W1V220)	22μF,±20%,35V		
C 142	Cer,(CC924CH1H820J)	82pF,±5%,50V		
C 143	Cer,(CC924CH1H330J)	33pF,±5%,50V		
C 144	Cer,(CC924CH1H390J)	39pF,±5%,50V		
C 145	Cer,(CK924C1H102M)	1000pF,±20%,50V		
C 146	Cer,(CK924C1H102M)	1000pF,±20%,50V		
C 147	Cer,(CK924C1H102M)	1000pF,±20%,50V		
C 148	Cer,(CK924C1H102M)	1000pF,±20%,50V		
C 149	Cer,(CK924C1H102M)	1000pF,±20%,50V		
C 150	Cer,(CK924C1H103M)	0.01μF,±20%,50V		
C 151	Elect,(CE04W1V220)	22μF,±20%,35V		
C 152	Cer,(CK924C1H102M)	1000pF,±20%,50V		
C 153	Cer,(CK924C1H102M)	1000pF,±20%,50V		
C 154	Cer,(CK924C1H102M)	1000pF,±20%,50V		
C 155	Cer,(CK924C1H102M)	1000pF,±20%,50V		
C 156	Cer,(CC924CH1H101J)	100pF,±5%,50V		
C 157	Cer,(CC924CH1H101J)	100pF,±5%,50V		
C 158	Cer,(CC924CH1H101J)	100pF,±5%,50V		
C 159	Cer,(CC924CH1H101J)	100pF,±5%,50V		
C 160	Cer,(CC924CH1H101J)	100pF,±5%,50V		
C 161	Elect,(CE04W1V220)	22μF,±20%,35V		
C 162	Elect,(CE04W1V220)	22μF,±20%,35V		
C 163	Elect,(CE04W1V220)	22μF,±20%,35V		

( ): Manufacturer's part number

* : Selected at factory

34W81255 4/15

COMPONENT LIST OF IF 1

CKT REF	DESCRIPTION	RATING		NOTE
C 164	Elect,(CE04W1V220)	22μF,±20%,35V		
C 165	Tant,(CS02H1D2R2M)	2.2μF,±20%,20V		
C 166	Tant,(CS02H1D2R2M)	2.2μF,±20%,20V		
C 167	Elect,(CE04W1V220)	22μF,±20%,35V		
C 168	Cer,(CK924C1H103M)	0.01μF,±20%,50V		
C 169	Cer,(CK924C1H103M)	0.01μF,±20%,50V		
C 170	Cer,(CK924C1H102M)	1000pF,±20%,50V		
C 171	Cer,(CK924C1H104M)	0.1μF,±20%,50V		
C 172	Cer,(CK924C1H104M)	0.1μF,±20%,50V		
C 173	Elect,(CE04W1V220)	22μF,±20%,35V		
C 174	Elect,(CE04W1V220)	22μF,±20%,35V		
C 175	Elect,(CE04W1V220)	22μF,±20%,35V		
C 176	Elect,(CE04W1V220)	22μF,±20%,35V		
C 177	Cer,(CC924CH1H471J)	470pF,±5%,50V		
C 178	Cer,(RPE111CH201G50)	200pF,±2%,50V		
C 179	Cer,(RPE111CH201G50)	200pF,±2%,50V		
C 180	Cer,(RPE111CH201G50)	200pF,±2%,50V		
C 181	Plast,(ECQ-M1H 103KZ)	0.01μF,±10%,50V		
C 182	Elect,(CE04W1V220)	22μF,±20%,35V		
C 183	Elect,(CE04W1V220)	22μF,±20%,35V		
C 184	Plast,(ECQ-M1H 104KZ)	0.1μF,±10%,50V		
C 185	Cer,(QS04 2870pF±1% 50WV)	2870pF,±1%,50V		
C 186	Cer,(QS04 301pF±1% 50WV)	301pF,±1%,50V		
C 187	Cer,(QS04 909pF±1% 50WV)	909pF,±1%,50V		
C 188	Cer,(QS04 681pF±1% 50WV)	681pF,±1%,50V		
C 189	Cer,(QS04 10000pF±1% 50WV)	0.01μF,±1%,50V		
C 190	Cer,(QS04 4640pF±1% 50WV)	4640pF,±1%,50V		
C 191	Cer,(QS04 2370pF±1% 50WV)	2370pF,±1%,50V		
C 192	Cer,(QS04 750pF±1% 50WV)	750pF,±1%,50V		
C 193	Cer,(QS04 4640pF±1% 50WV)	4640pF,±1%,50V		
C 194	Cer,(QS04 365pF±1% 50WV)	365pF,±1%,50V		
C 195	Cer,(QS04 681pF±1% 50WV)	681pF,±1%,50V		
C 196	Elect,(CE04W1V220)	22μF,±20%,35V		
C 197	Cer,(RPE111CH751G50)	750pF,±2%,50V		
C 198	Cer,(CC924CH1H330J)	33pF,±5%,50V		
C 199	Cer,(RPE111CH431G50)	430pF,±2%,50V		
C 200	Cer,(RPE111CH511G50)	510pF,±2%,50V		

( ): Manufacturer's part number

* : Selected at factory

34W81255	5/15

COMPONENT LIST OF IF 1

CKT REF	DESCRIPTION	RATING		NOTE
C 201	Cer,(CC924CH1H272J)	2700pF,±5%,50V		
C 202	Cer,(RPE111CH361G50)	360pF,±2%,50V		
C 203	Cer,(RPE111CH750G50)	750pF,±2%,50V		
C 204	Cer,(RPE111CH621G50)	620pF,±2%,50V		
C 205	Cer,(RPE111jCH911G50)	910pF,±2%,50V		
C 206	Cer,(RPE111CH241G50)	240pF,±2%,50V		
C 207	Cer,(RPE111CH511G50)	510pF,±2%,50V		
C 208	Cer,(CK924C1C1H103M)	0.01μF,±20%,50V		
C 209	Cer,(CK924C1H103M)	0.01μF,±20%,50V		
C 210	Cer,(CK924C1H103M)	0.01μF,±20%,50V		
C 211	Cer,(CC924CH1H220J)	22pF,±5%,50V		OPT31
C 212	Cer,(QS04 9070pF±2% 50WV)	9070pF,±2%,50V		OPT31
C 213	Plast,(ECQ-P1 124FZ)	0.12μF,±1%,100V		OPT31
C 214	Cer,(QS04 1100pF±1% 50WV)	1100pF,±1%,50V		OPT31
C 215	Cer,(QS04 2870pF±1% 50WV)	2870pF,±1%,50V		OPT31
C 216	Cer,(QS04 1100pF±1% 50WV)	1100pF,±1%,50V		OPT31
C 217	Cer,(CK924C1H104M)	0.1μF,±20%,50V		OPT31
C 218	Elect,(CE04W1E470)	47μF,±20%,25V		OPT31
C 219	Cer,(CC924CH1H151J)	150pF,±5%,50V		OPT31
C 220	Cer,(CK924C1H104M)	0.1μF,±20%,50V		OPT31
C 221	Cer,(QS04 9070±2%50WV)	9070pF,±2%,50V		OPT31
C 222	Cer,(RPE111CH911G50)	910pF,±2%,50V		OPT31
C 223	Cer,(RPE111CH751G50)	750pF,±2%,50V		OPT31
C 224	Cer,(RPE111CH911G50)	910pF,±2%,50V		OPT31
C 225	Cer,(RPE111CH911G50)	910pF,±2%,50V		OPT31
K 1	Relay,(NR-SD-12V)			
K 2	Relay,(NR-SD-12V)			
K 3	Relay,(NR-SD-12V)			
K 4	Relay,(NR-SD-12V)			
K 5	Relay,(NR-SD-12V)			OPT31
K 6	Relay, (NR-SD-12V)			OPT31
L 1	Not assinged	10μH		
L 2	Microinductor, (LF8-100K)			
L 3	Microinductor, (LF8-100K)	10μH		
L 4	Not assigned			
L 5	Coil,(339T13580A)			

( ): Manufacturer's part number

* : Selected at factory

34W81255	6/15

COMPONENT LIST OF IF 1

CKT REF	DESCRIPTION	RATING		NOTE
L 6	Coil,(339T13580A)			
L 7	Coil,(339T13580C)			
L 8	Coil,(339T13580D)			
L 9	Coil,(339T13580E)			
L 10	Coil,(339T13580F)			
L 11	Coil,(339T13580G)			
L 12	(339T13580H)			
L 13	Coil,(339T13580J)			
L 14	Coil,(339T13581A)			
L 15	Coil,(339T13581B)			
L 16	Coil,(339T13581C)			
L 17	Coil,(339T13581D)			
L 18	Microinductor, (LH1-102K)	0.1mH		
L 19	Coil,(339T13582A)			
L 20	Coil,(339T13582B)			
L 21	Coil,(339T13582C)			
L 22	Coil,(339T13582D)			
L 23	Coil,(339T13852E)			
L 24	Coil,(339T13582F)			
L 25	Coil,(339T13582G)			
L 26	Coil,(339T13582H)			
L 27	Coil,(339T13582J)			
L 28	Coil,(339T13583A)			
L 29	Coil,(339T13583B)			
L 30	Coil,(339T13583C)			
L 31	Coil,(339T13583D)			
L 32	Coil,(339T13583E)			
L 33	Coil,(339T13572A)	3.48mH		
L 34	Coil,(339T13572C)	4.79mH		
L 35	Coil,(339T13572B)	4.05mH		
L 36	Not assigned			
L 37	Microinductor, (LF8-100K)	10μH		
L 38	Microindutor, (LF8-101k)	100μH		
L 39	Microinductor, (LF8-101K)	100μH		
L 40	Microinductor, (LF8-101K)	100μH		
L 41	Coil,(SP0408-1R0K)			
L 42	Microinductor, (LF8-101K)	100μH		
L 43	Microinductor, (LF8-101K)	100μH		
L 44	Microinductor, (LF8-101K)	100μH		
L 45	Microinductor, (LF8-101K)	100μH		

( ): Manufacturer's part number

* : Selected at factory

34W81255	7/15

COMPONENT LIST OF IF 1

CKT REF	DESCRIPTION	RATING		NOTE
L 46	Microinductor, (LF8-101K)	100μH		
L 47	Microinductor, (LF8-101K)	100μH		
L 48	Microincurtor, (LF8-101K)	100μH		
L 49	Microinductor, (LF8-101K)	100μH		
L 50	Microinductor, (LF8-101K)	100μH		
L 51	Coil,(339T13389D)			OPT31
L 52	Coil,(339T13589B)			OPT31
L 53	Coil,(339T13589C)			OPT31
L 54	Coil,(339T13589A)			OPT31
Q 1	Tr,Si,NPN,(2SC2369)			
Q 2	Tr,Si,NPN,(2SC2369)			
Q 3	Not assigned			
Q 4	Tr,Si,PNP,(2SA711)			
Q 5	Tr,Si,NPN,(2SC943)			

( ): Manufacturer's part number

* : Selected at factory

34W81255 | 8/15

COMPONENT LIST OF IF 1

CKT REF	DESCRIPTION	RATING		NOTE
Q 6	Di,Si,(1S953)			OPT31
Q 7	Tr,Si,PNP,(2SA578)			
Q 8	Tr,Si,NPN,(2SC1010)			
Q 9	Tr,Si,PNP,(2SA603)			
Q 10	IC,(MA332)			
Q 11	IC,(HI-201-5)			
Q 12	Di,Si,(1S953)			
Q 13	Di,Si,(1S953)			
Q 14	IC,(MA332)			
Q 15	IC,(HI-201-5)			
Q 16	IC,(HI-201-5)			
Q 17	IC,(HI-201-5)			
Q 18	IC,(HI-201-5)			
Q 19	IC,(HI-201-5)			
Q 20	IC,(μPA67C)			
Q 21	IC,(MA332)			
Q 22	IC,(MA332)			
Q 23	IC,(MA332)			
Q 24	IC,(LM337T)			
Q 25	IC,(μPC258C)			
Q 26	IC,(LM337T)			
Q 27	Tr,Si,PNP,(2SA603)			
Q 28	Tr,Si,NPN,(2SC943)			
Q 29	IC,(74LS290)			
Q 30	IC,(74LS390)			
Q 31	IC,(74LS290)			
Q 32	IC,(74LS02)			
Q 33	IC,(74LS293)			
Q 34	IC,(μPC271C)			
Q 35	IC,(TC4017BP)			
Q 36	IC,(CD4046BCN)			
Q 37	IC,(LM317T)			
Q 38	IC,(μPD8253C-2)			
Q 39	IC,(TC40H002P)			
Q 40	IC,(TC40H000P)			
Q 41	IC,(TC40H032P)			
Q 42	IC,(TC40H010P)			
Q 43	IC,(TC40H244P)			
Q 44	IC,(TC40H042P)			
Q 45	IC,(TC40H374P)			
Q 46	IC,(TC40H374P)			
Q 47	IC,(TC40H374P)			
Q 48	IC,(μPC14305H)			
Q 49	IC,(μPC157C)			
Q 50	Di,Si,(1S2208)			

( ): Manufacturer's part number

* : Selected at factory

34W81255 9/15

COMPONENT LIST OF IF 1

CKT REF	DESCRIPTION	RATING		NOTE
Q 51	Tr,Si,NPN,(2SC2369)			
Q 52	Tr,Si,PNP,(2SA711)			
Q 53	IC,(HD10551)			
Q 54	Tr,Si,NPN,(2SC2369)			
Q 55	Tr,Si,PNP,(2SA711)			
Q 56	Di,Si,(1SS97)			
Q 57	Di,Si,(1SS97)			
Q 58	Di,Si,(1SS97)			
Q 59	Di,Si,(1SS97)			
Q 60	IC,(74S02)			
Q 61	IC,(μPC258C)			
Q 62	IC,(μPC258C)			
Q 63	IC,(μPC258C)			
Q 64	IC,(μPC258C)			
Q 65	IC,(μPC258C)			
Q 66	IC,(μPC258C)			
Q 67	Di,Si,(1S953)			
Q 68	Di,Si,(1S953)			
Q 69	Di,Si,(1S953)			
Q 70	Di,Si,(1S953)			
Q 71	IC,(MA332)			OPT31
Q 72	Tr,Si,NPN,(2SC943)			OPT31
Q 73	Di,Si,(1S953)			
Q 74	Di,Si,(1S953)			
Q 75	IC,(74LS02)			
R 1	CF,(ARD25T750J)	75Ω,±5%,1/4W		
R 2	CF,(ARD25T123J)	12kΩ,±5%,1/4W		
R 3	CF,(ARD25T222J)	2.2kΩ,±5%,1/4W		
R 4	CF,(ARD25T101J)	100Ω,±5%,1/4W		
R 5	CF,(ARD25T122J)	1.2kΩ,±5%,1/4W		
R 6	CF,(ARD25T101J)	100Ω,±5%,1/4W		
R 7	CF,(ARD25T270J)	27Ω,±5%,1/4W		
R 8	CF,(ARD25T331J)	330Ω,±5%,1/4W		
R 9	MF,(LP1/8 330ΩJT51)	330Ω,±5%,1/8W		
R 10	CF,(ARD25T101J)	100Ω,±5%,1/4W		
R 11	CF,(ARD25T621J)	620Ω,±5%,1/4W		
R 12	CF,(ARD25T151J)	150Ω,±5%,1/4W		
R 13	Not assigned			
R 14	CF,(ARD25T103J)	10kΩ,±5%,1/4W		
R 15	CF,(ARD25T103J)	10kΩ,±5%,1/4W		
R 16	CF,(ARD25T103J)	10kΩ,±5%,1/4W		
R 17	CF,(ARD25T820J)	82Ω,±5%,1/4W		
R 18	CF,(ARD25T222J)	2.2kΩ,±5%,1/4W		
R 19	CF,(ARD25T222J)	2.2kΩ,±5%,1/4W		
R 20	CF,(ARD25T181J)	180Ω,±5%,1/4W		
R 21	CF,(ARD25T472J)	4.7kΩ,±5%,1/4W		
R 22	CF,(ARD25T183J)	18kΩ,±5%,1/4W		
R 23	CF,(ARD25T621J)	620Ω,±5%,1/4W		

( ): Manufacturer's part number

* : Selected at factory

34W81255 10/15

COMPONENT LIST OF IF 1

CKT REF	DESCRIPTION	RATING		NOTE
R 24	CF,(ARD25T822J)	8.2kΩ,±5%,1/4W		
R 25	CF,(ARD25T751J)	750Ω,±5%,1/4W		
R 26	CF,(ARD25T271J)	270Ω,±5%,1/4W		
R 27	MF,(RN14K2E9090D)	909Ω,±0.5%,1/4W		
R 28	Var,MF,(RJ-6P 200Ω)	200Ω,1/2W		
R 29	CF,(ARD25T122J)	1.2kΩ,±5%,1/4W		
R 30	CF,(ARD25T103J)	10kΩ,±5%,1/4W		
R 31	MF,(RN14K2E1912D)	19.1kΩ,±0.5%,1/4W		
R 32	CF,(ARD25T101J)	100Ω,±5%,1/4W		
R 33	CF,(ARD25T601J)	600Ω,±5%,1/4W		
R 34	CF,(ARD25T101J)	100Ω,±5%,1/4W		
R 35	CF,(ARD25T221J)	220Ω,±5%,1/4W		
R 36	MF,(LP1/8 330ΩJT51)	330Ω,±5%,1/8W		
R 37	CF,(ARD25T221J)	220Ω,±5%,1/4W		
R 38	CF,(ARD25T220J)	22Ω,±5%,1/4W		
R 39	CF,(ARD25T750J)	75Ω,±5%,1/4W		
R 40	CF,(ARD25T102J)	1kΩ,±5%,1/4W		
R 41	CF,(ARD25T561J)	560Ω,±5%,1/4W		
R 42	CF,(ARD25T222J)	2.2kΩ,±5%,1/4W		
R 43	CF,(ARD25T222J)	2.2kΩ,±5%,1/4W		
R 44	CF,(ARD25T271J)	270Ω,±5%,1/4W		
R 45	CF,(ARD25T750J)	75Ω,±5%,1/4W		
R 46	CF,(ARD25T101J)	100Ω,±5%,1/4W		
R 47	CF,(ARD25T101J)	100Ω,±5%,1/4W		
R 48	MF,(RN14K2E2552D)	25.5kΩ,±0.5%,1/4W		
R 49	MF,(RN14K2E2942D)	29.4kΩ,±0.5%,1/4W		
R 50	MF,(RN14K2E3092D)	30.9kΩ,±0.5%,1/4W		
R 51	MF,(RN14K2E5361D)	5.36kΩ,±0.5%,1/4W		
R 52	MF,(RN14K2E1691D)	1.69kΩ,±0.5%,1/4W		
R 53	MF,(RN14K2E9090D)	909Ω,±0.5%,1/4W		
R 54	Var,MF,(RJ-6P 200Ω)	200Ω,1/2W		
R 55	MF,(RN14K2E93R1D)	93.1Ω,±0.5%,1/4W		
R 56	Var,MF,(RJ-6P 100Ω)	100Ω,1/2W		
R 57	MF,(RN14K2E1001D)	1.0kΩ,±0.5%,1/4W		
R 58	CF,(ARD25T102J)	1kΩ,±5%,1/4W		
R 59	CF,(ARD25T822J)	8.2kΩ,±5%,1/4W		
R 60	Var,MF,(RJ-6P 5kΩ)	5kΩ,1/2W		
R 61	CF,(ARD25T102J)	1kΩ,±5%,1/4W		
R 62	CF,(ARD25T101J)	100Ω,±5%,1/4W		
R 63	CF,(ARD25T101J)	100Ω,±5%,1/4W		
R 64	MF,(RN14K2E1272D)	12.7kΩ,±0.5%,1/4W		
R 65	MF,(RN14K2E2552D)	25.5kΩ,±0.5%,1/4W		
R 66	MF,(RN14K2E2942D)	29.4kΩ,±0.5%,1/4W		
R 67	MF,(RN14K2E3162D)	31.6kΩ,±0.5%,1/4W		
R 68	MF,(RN14K2E1622D)	16.2kΩ,±0.5%,1/4W		
R 69	MF,(RN14K2E5491D)	5.49kΩ,±0.5%,1/4W		
R 70	MF,(RN14K2E1691D)	1.69kΩ,±0.5%,1/4W		

( ): Manufacturer's part number

* : Selected at factory

34W81255	11/15

COMPONENT LIST OF IF 1

CKT REF	DESCRIPTION	RATING		NOTE
R 71	MF,(RN14K2E5230D)	523Ω,±0.5%,1/4W		
R 72	MF,(RN14K2E1180D)	118Ω,±0.5%,1/4W		
R 73	Var,MF,(RJ-6P 200Ω)	200Ω,1/2W		
R 74	Var,MF,(RJ-6P 100Ω)	100Ω,1/2W		
R 75	Var,MF,(RJ-6P 100Ω)	100Ω,1/2W		
R 76	CF,(ARD25T392J)	3.9kΩ,±5%,1/4W		
R 77	CF,(ARD25T223J)	22kΩ,±5%,1/4W		
R 78	Var,MF,(RJ-6P 2kΩ)	2kΩ,1/2W		
R 79	Var,MF,(RJ-6P 50kΩ)	50kΩ,1/2W		
R 80	CF,(ARD25T152J)	1.5kΩ,±5%,1/4W		
R 81	Var,MF,(RJ-6P 2kΩ)	2kΩ,1/2W		
R 82	CF,(ARD25T222J)	2.2kΩ,±5%,1/4W		
R 83	CF,(ARD25T222J)	2.2kΩ,±5%,1/4W		
R 84	MF,(RN14K2E4991D)	4.99kΩ,±0.5%,1/4W		
R 85	CF,(ARD25T101J)	100Ω,±5%,1/4W		
R 86	CF,(ARD25T101J)	100Ω,±5%,1/4W		
R 87	CF,(ARD25T272J)	2.7kΩ,±5%,1/4W		
R 88	CF,(ARD25T224J)	220kΩ,±5%,1/4W		
R 89	CF,(ARD25T101J)	100Ω,±5%,1/4W		
R 90	CF,(ARD25T101J)	100Ω,±5%,1/4W		
R 91	CF,(APD25T513J)	51kΩ,±5%,1/4W		
R 92	MF,(RN14K2E7501D)	7.50kΩ,±0.5%,1/4W		
R 93	CF,(APD25T152J)	1.5kΩ,±5%,1/4W		
R 94	CF,(ARD25T562J)	5.6kΩ,±5%,1/4W		
R 95	MF,(RN14K2E1183D)	118kΩ,±0.5%,1/4W		
R 96	MF,(RN14K2E7502D)	75.0kΩ,±0.5%,1/4W		
R 97	MF,(RN14K2E5112D)	51.1kΩ,±0.5%,1/4W		
R 98	MF,(RN14K2E3322D)	33.2kΩ,±0.5%,1/4W		
R 99	MF,(RN14K2E2492D)	24.9kΩ,±0.5%,1/4W		
R 100	MF,(RN14K2E1692D)	16.9kΩ,±0.5%,1/4W		
R 101	Not assigned			
R 102	CF,(ARD25T153J)	15kΩ,±5%,1/4W		
R 103	Var,MF,(RJ-6S 20kΩ)	20kΩ,1/2W		
R 104	CF,(ARD25T513J)	51kΩ,±5%,1/4W		
R 105	CF,(ARD25T101J)	100Ω,±5%,1/4W		
R 106	CF,(ARD25T101J)	100Ω,±5%,1/4W		
R 107	MF,(RN14K2E1272D)	12.7kΩ,±0.5%,1/4W		
R 108	MF,(RN14K2E2552D)	25.5kΩ,±0.5%,1/4W		
R 109	MF,(RN14K2E2942D)	29.4kΩ,±0.5%,1/4W		
R 110	MF,(RN14K2E3162D)	31.6kΩ,±0.5%,1/4W		
R 111	MF,(RN14K2E1622D)	16.2kΩ,±0.5%,1/4W		
R 112	MF,(RN14K2E5491D)	5.49kΩ,±0.5%,1/4W		
R 113	MF,(RN14K2E1691D)	1.69kΩ,±0.5%,1/4W		
R 114	MF,(RN14K2E5230D)	523Ω,±0.5%,1/4W		
R 115	MF,(RN14K2E1180D)	118Ω,±0.5%,1/4W		

( ): Manufacturer's part number

* : Selected at factory

34W81255 12/15

COMPONENT LIST OF IF 1

CKT REF	DESCRIPTION	RATING		NOTE
R 116	Var,MF,(RJ-6P 200Ω)	200Ω,1/2W		
R 117	Var,MF,(RJ-6P 100Ω)	100Ω,1/2W		
R 118	Var,MF,(RJ-6P 100Ω)	100Ω,1/2W		
R 119	Var,MF,(RJ-6P 2kΩ)	2kΩ,1/2W		
R 120	Var,MF,(RJ-6P 2kΩ)	2kΩ,1/2W		
R 121	CF,(ARD25T750J)	75Ω,±5%,1/4W		
R 122	CF,(ARD25T331J)	330Ω,±5%,1/4W		
R 123	CF,(ARD25T103J)	10kΩ,±5%,1/4W		
R 124	CF,(ARD25T103J)	10kΩ,±5%,1/4W		
R 125	CF,(ARD25T111J)	110Ω,±5%,1/4W		
R 126	CF,(ARD25T471J)	470Ω,±5%,1/4W		
R 127	CF,(ARD25T511J)	510Ω,±5%,1/4W		
R 128	MF,(RN14K2E2000D)	200Ω,±0. %,1/4W		
R 129	MF,(RN14K2E1401D)	1.4kΩ,±0.5%,1/4W		
R 130	MF,(RN14K2E2000D)	200Ω,±0.5%,1/4W		
R 131	MF,(RN14K2E1401D)	1.4kΩ,±0.5%,1/4W		
R 132	CF,(ARD25T182J)	1.8kΩ,±5%,1/4W		
R 133	CF,(ARD25T152J)	1.5kΩ,±5%,1/4W		
R 134	CF,(ARD25T103J)	10kΩ,±5%,1/4W		
R 135	CF,(ARD25T224J)	220kΩ,±5%,1/4W		
R 136	CF,(ARD25T183J)	18kΩ,±5%,1/4W		
R 137	CF,(ARD25T682J)	6.8kΩ,±5%,1/4W		
R 138	CF,(ARD25T472J)	4.7kΩ,±5%,1/4W		
R 139	CF,(ARD25T103J)	10kΩ,±5%,1/4W		
R 140	CF,(ARD25T103J)	10kΩ,±5%,1/4W		
R 141	CF,(ARD25T103J)	10kΩ,±5%,1/4W		
R 142	CF,(ARD25T103J)	10kΩ,±5%,1/4W		
R 143	CF,(ARD25T103J)	10kΩ,±5%,1/4W		
R 144	CF,(ARD25T561J)	560Ω,±5%,1/4W		
R 145	CF,(ARD25T221J)	220Ω,±5%,1/4W		
R 146	CF,(ARD25T103J)	10kΩ,±5%,1/4W		
R 147	CF,(ARD25T101J)	100Ω,±5%,1/4W		
R 148	CF,(ARD25T103J)	10kΩ,±5%,1/4W		
R 149	CF,(ARD25T102J)	1kΩ,±5%,1/4W		
R 150	CF,(ARD25T750J)	75Ω,±5%,1/4W		
R 151	Not assigned			
R 152	CF,(ARD25T222J)	2.2kΩ,±5%,1/4W		
R 153	CF,(ARD25T821J)	820Ω,±5%,1/4W		
R 154	CF,(ARD25T471J)	470Ω,±5%,1/4W		
R 155	CF,(ARD25T392J)	3.9kΩ,±5%,1/4W		
R 156	CF,(ARD25T101J)	100Ω,±5%,1/4W		
R 157	CF,(ARD25T822J)	8.2kΩ,±5%,1/4W		
R 158	CF,(ARD25T122J)	1.2kΩ,±5%,1/4W		
R 159	CF,(ARD25T391J)	390Ω,±5%,1/4W		
R 160	CF,(ARD25T331J)	330Ω,±5%,1/4W		

( ): Manufacturer's part number

* : Selected at factory

34W81255 13/15

COMPONENT LIST OF IF 1

CKT REF	DESCRIPTION	RATING		NOTE
R 161	CF,(ARD25T102J)	1kΩ,±5%,1/4W		
R 162	CF,(ARD25T473J)	47kΩ,±5%,1/4W		
R 163	CF,(ARD25T332J)	3.3kΩ,±5%,1/4W		
R 164	CF,(ARD25T332J)	3.3kΩ,±5%,1/4W		
R 165	CF,(ARD25T473J)	47kΩ,±5%,1/4W		
R 166	Var,MF,(RJ-6P 2kΩ)	2kΩ,1/2W		
R 167	CF,(ARD25T102J)	1kΩ,±5%,1/4W		
R 168	CF,(ARD25T104J)	100kΩ,±5%,1/4W		
R 169	CF,(ARD25T473J)	47kΩ,±5%,1/4W		
R 170	CF,(ARD25T221J)	220Ω,±5%,1/4W		
R 171	CF,(ARD25T562J)	5.6kΩ,±5%,1/4W		
R 172	MF,(RN14K2E1000D)	100Ω,±0.5%,1/4W		
R 173	MF,(RN14K2E4991D)	4.99kΩ,±0.5%,1/4W		
R 174	MF,(RN14K2E4021D)	4.02kΩ,±0.5%,1/4W		
R 175	MF,(RN14K2E1403D)	140kΩ,±0.5%,1/4W		
R 176	Var,MF,(RJ-6P 20kΩ)	20kΩ,1/2W		
R 177	MF,(RN14K2E1003D)	100kΩ,±0.5%,1/4W		
R 178	MF,(RN14K2E1002D)	10kΩ,±0.5%,1/4W		
R 179	MF,(RN14K2E1002D)	10kΩ,±0.5%,1/4W		
R 180	MF,(RN14K2E4022D)	40.2kΩ,±0.5%,1/4W		
R 181	Var,MF,(RJ-6P 10kΩ)	10kΩ,1/2W		
R 182	MF,(RN14K2E1000D)	100Ω,±0.5%,1/4W		
R 183	MF,(RN14K2E4991D)	4.99kΩ,±0.5%,1/4W		
R 184	MF,(RN14K2E4021D)	4.02kΩ,±0.5%,1/4W		
R 185	MF,(RN14K2E1403D)	140kΩ,±0.5%,1/4W		
R 186	Var,MF,(RJ-6P 20kΩ)	20kΩ,1/2W		
R 187	MF,(RN14K2E1003D)	100kΩ,±0.5%,1/4W		
R 188	MF,(RN14K2E1002D)	10kΩ,±0.5%,1/4W		
R 189	MF,(RN14K2E1002D)	10kΩ,±0.5%,1/4W		
R 190	MF,(RN14K2E4022D)	40.2kΩ,±0.5%,1/4W		
R 191	Var,MF,(RJ-6P 10kΩ)	10kΩ,1/2W		
R 192	MF,(RN14K2E1000D)	100Ω,±0.5%,1/4W		
R 193	MF,(RN14K2E1000D)	100Ω,±0.5%,1/4W		
R 194	MF,(RN14K2E1000D)	100Ω,±0.5%,1/4W		
R 195	MF,(RN14K2E4991D)	4.99kΩ,±0.5%,1/4W		
R 196	MF,(RN14K2E4021D)	4.02kΩ,±0.5%,1/4W		
R 197	MF,(RN14K2E1000D)	100Ω,±0.5%,1/4W		
R 198	MF,(RN14K2E1003D)	100kΩ,±0.5%,1/4W		
R 199	MF,(RN14K2E1002D)	10kΩ,±0.5%,1/4W		
R 200	MF,(RN14K2E1002D)	10kΩ,±0.5%,1/4W		
R 201	MF,(RN14K2E1403D)	140kΩ,±0.5%,1/4W		
R 202	MF,(RN14K2E4022D)	40.2kΩ,±0.5%,1/4W		
R 203	Var,MF,(RJ-6P 20kΩ)	20kΩ,1/2W		
R 204	Var,MF,(RJ-6P 10kΩ)	10kΩ,1/2W		
R 205	CF,(ARD25T332J)	3.3kΩ,±5%,1/4W		

( ): Manufacturer's part number

* : Selected at factory

34W81255 14/15

COMPONENT LIST OF IF 1

CKT REF	DESCRIPTION	RATING		NOTE
R 206	CF,(ARD25T332J)	3.3kΩ,±5%,1/4W		
R 207	CF,(ARD25T104J)	100kΩ,±5%,1/4W		
R 208	CF,(ARD25T332J)	3.3kΩ,±5%,1/4W		
R 209	CFM(ARD25T332J)	3.3kΩ,±5%,1/4W		
R 210	CR,(ARD25T104J)	100kΩ,±5%,1/4W		
R 211	CF,(ARD25T103J)	10kΩ,±5%,1/4W		
R 212	CF,(ARD25T103J)	10kΩ,±5%,1/4W		
R 213	CF,(ARD25T103J)	10kΩ,±5%,1/4W		
R 214	CF,(ARD25T331J)	330Ω,±5%,1/4W		
R 215	CF,(ARD25T331J)	330Ω,±5%,1/4W		
R 216	MF,(RN14K2E2452D)	24.5kΩ,±0.5%,1/4W		OPT31
R 217	Var,MF,(RJ-6P 5kΩ)	5kΩ,1/2W		OPT31
R 218	CF,(ARD25T222J)	2.2kΩ,±5%,1/4W		OPT31
R 219	CF,(ARD25T623J)	62kΩ,±5%,1/4W		OPT31
R 220	CF,(ARD25T301J)	300Ω,±5%,1/4W		OPT31
R 221	CF,(ARD25T562J)	5.6kΩ,±5%,1/4W		OPT31
R 222	CF,(ARD25T471J)	470Ω,±5%,1/4W		OPT31
R 223	CF,(ARD25T472J)	4.7kΩ,±5%,1/4W		OPT31
R 224	CF,(ARD25T221J)	220Ω,±5%,1/4W		OPT31
R 225	CF,(ARD25T203J)	20kΩ,±5%,1/4W		
R 226	CF,(ARD25T203J)	20kΩ,±5%,1/4W		
R 227	CF,(ARD25T203J)	20kΩ,±5%,1/4W		
R 228	MF,(RN14K2E1741D)	1740Ω,±0.5%,1/4W		
R 229	MF,(RN14K2E2000D)	200Ω,±0.5%,1/4W		
R 230	CF,(ARD25T103J)	10kΩ,±5%,1/4W		
R 231	CF,(ARD25T103J)	10kΩ,±5%,1/4W		
R 232	CF,(ARD25T103J)	10kΩ,±5%,1/4W		
R 233	CF,(ARD25T103J)	10kΩ,±5%,1/4W		
R 234	MF,(LP1/8 1kΩGT51)	1kΩ,±2%,1/8W		
R 235	MF,(LP1/8 1kΩGT51)	1kΩ,±2%,1/8W		
R 236	MF,(LP1/8 1kΩGT51)	1kΩ,±2%,1/8W		
R 237	CF,(ARD25T471J)	470Ω,±5%,1/4W		
R 238	CF,(ARD25T331J)	330Ω,±5%,1/4W		
T 1	Trans,(339T13554)			
T 2	Trans,(342T69294)			
X 1	XTAL OSC,(MC-18C)	56.0MHz		
X 2	XTAL OSC,(34X75905 A1)	24.9885kHz		
X 3	XTAL OSC,(34X75905 B1)	25.011kHz		
X 4	XTAL OSC,(34X75905 A2)	24,9885kKz		
X 5	XTAL OSC,(34X75905 B2)	25.011kHz		
X 6	XTAL OSC,(34X75905 A3)	24.9885kHz		
X 7	XTAL OSC,(34X75905 B3)	25.011kHz		
Z 1	M8 Mixer			
Z 2	M8 Mixer			

( ): Manufacturer's part number

* : Selected at factory

34W81255 15/15

COMPONENT LIST OF IF 2

CKT REF	DESCRIPTION	RATING		NOTE
C 1	Cer,(CC92CH1H220JY)	22pF,±5%,50V		
C 2	Cer,(CK924C1H104Z)	0.1μF,+80/-20%,50V		
C 3	Cer,(CK924C1H104Z)	0.1μF,+80/-20%,50V		
C 4	Elect,(CE04W1E221)	220μF,±20%,25V		
C 5	Elect,(CE04W1E221)	220μF,±20%,25V		
C 6	Cer,(CK924C1H104Z)	0.1μF,+80/-20%,50V		
C 7	Cer,(RPE111CH561G50)	560pF,±2%,50V		
C 8	Cer,(CC924CH1H050D)	5pF,±0.5pF,50V		
C 9	Cer,(CC924CH1H100D)	10pF,±0.5pF,50V		
C 10	Elect,(CE04W1E221)	220μF,±20%,25V		
C 11	Elect,(CE04W1E221)	220μF,±20%,25V		
C 12	Elect,(CE04W1E221)	220μF,±20%,25V		
C 13	Elect,(CE04W1E220)	22μF,±20%,25V		
C 14	Elect,(CE04W1E221)	220μF,±20%,25V		
C 15	Elect,(CE04W1A101)	100μF,±20%,10V		
C 16	Elect,(CE04W1E221)	220μF,±20%,25V		
C 17	Elect,(CE04W1E221)	220μF,±20%,25V		
C 18	Cer,(CK924C1H104M)	0.1μF,±20%,50V		
C 19	Tant,(CS02H1A4R7M)	4.7μF,±20%,10V		
C 20	Tant,(CS02H1VR47M)	0.47μF,±20%,35V		
C 21	Cer,(CK924C1H104Z)	0.1μF,+80/-20%,50V		
C 22	Plast,(ECQ-M05 103KZ)	0.01μF,±10%,50V		
C 23	Plast,(ECQ-M05 103KZ)	0.01μF,±10%,50V		
C 24	Elect,(CE04W1E221)	220μF,±20%,25V		
C 25	Elect,(CE04W1E221)	220μF,±20%,25V		
C 26	Elect,(CE04W1J1R0)	1μF,±20%,63V		ML422B
C 26	Cer,(CK924C1H473M)	0.047μF,±20%,50V		ML422C
C 27	Elect,(CE04W1V220)	22μF,±20%,35V		
C 28	Elect,(CE04W1V220)	22μF,±20%,35V		
C 29	Elect,(CE04W1V220)	22μF,±20%,35V		
C 30	Plast,(ECQ-P1 222FZ)	2200pF,±1%,100V		
C 31	Plast,(ECQ-P1 392FZ)	3900pF,±1%,100V		
C 32	Cer,(RPE111CH361G50)	360pF,±2%,50V		
C 33	Cer,(RPE111CH241G50)	240pF,±2%,50V		
C 34	Plast,(ECQ-P1 912FZ)	9100pF,±1%,100V		
C 35	Not assigned			
C 36	Tant,(CS02H1D2R2M)	2.2μF,±20%,20V		
C 37	Elect,(CE04W1E471)	470μF,±20%,25V		
C 38	Elect,(CE04W1V220)	22μF,±20%,35V		
C 39	Elect,(CE04W1C470)	47μF,±20%,16V		
C 40	Elect,(CE04W1E221)	220μF,±20%,25V		
C 41	Cer,(CC924CH1H331J)	330pF,±5%,50V		
C 42	Elect,(CE04W1E471)	470μF,±20%,25V		
C 43	Elect,(CE04W1E471)	470μF,±20%,25V		
C 44	Cer,(CK924C1H104M)	0.1μF,±20%,50V		
C 45	Tant,(CS02H1C3R3M)	3.3μF,±20%,16V		

( ): Manufacturer's part number

* : Selected at factory

34W81256	1/17

COMPONENT LIST OF IF 2

CKT REF	DESCRIPTION	RATING		NOTE
C 46	Elect,(CE04W1E221)	220μF,±20%,25V		
C 47	Cer,(CK924C1H104M)	0.1μF,±20%,50V		
C 48	Elect,(CE04W1V220)	22μF,±20%,35V		
C 49	Elect,(CE04W1E470)	47μF,±20%,25V		
C 50	Cer,(CK924C1H104M)	0.1μF,±20%,50V		
C 51	Cer,(CK924C1H104M)	0.1μF,±20%,50V		
C 52	Cer,(CC924CH1H470J)	47pF,±5%,50V		
C 53	Cer,(CC924CH1H470J)	47pF,±5%,50V		
C 54	Cer,(CC924CH1H470J)	47pF,±5%,50V		
C 55	Cer,(CC924CH1H470J)	47pF,±5%,50V		
C 56	Cer,(CC924CH1H470J)	47pF,±5%,50V		
C 57	Cer,(CC924CH1H470J)	47pF,±5%,50V		
C 58	Cer,(CC924CH1H470J)	47pF,±5%,50V		
C 59	Cer,(CC924CH1H470J)	47pF,±5%,50V		
C 60	Cer,(CC924CH1H470J)	47pF,±5%,50V		
C 61	Cer,(CS02H1VR47M)	0.47μF,±20%,35V		
C 62	Cer,(CK924C1H473M)	4700pF,±20%,50V		
C 63	Cer,(CK924C1H102M)	1000pF,±20%,50V		
C 64	Cer,(CC924CH1H101J)	100pF,±5%,50V		
C 65	Cer, (CK924C1H104M)	0.1μF,±20%,50V		
C 66	Elect,(CE04W1V220)	22μF,±20%,35V		
C 67	Elect,(CE04W1V220)	22μF,±20%,35V		
C 68	Elect,(CE04W1E221)	220μF,±20%,25V		
C 69	Cer,(CK924C1H104M)	0.1μF,±20%,50V		
C 70	Elect,(CE04W1V220)	22μF,±20%,35V		
C 71	Plast,(ECQ-P1 392FZ)	3900pF,±1%,100V		
C 72	Cer,(CC924CH1H101J)	100pF,±5%,50V		
C 73	Plast,(ECQ-P1 132FZ)	1300pF,±1%,100V		
C 74	Cer,(CC924CH1H101J)	100pF,±5%,50V		
C 75	Plast,(ECQ-P1 392FZ)	3900pF,±1%,100V		
C 76	Cer,(CC924CH1H101J)	100pF,±5%,50V		
C 77	Cer,(RPE111CH241G50)	240pF,±2%,50V		
C 78	Cer,(CC924CH1H100D)	10pF,±0.5pF,50V		
C 79	Plast,(ECQ-P1 103FZ)	0.01μF,±1%,100V		
C 80	Plast,(ECQ-P1 392FZ)	3900pF,±1%,100V		
C 81	Cer,(CC924CH1H101J)	100pF,±5%,50V		
C 82	Plast,(ECQ-P1 392FZ)	3900pF,±1%,100V		
C 83	Cer,(CC924CH1H101J)	100pF,±5%,50V		
C 84	Plast,(ECQ-P1 392FZ)	3900pF,±1%,100V		
C 85	Cer,(CC924CH1H101J)	100pF,±5%,50V		
C 86	Plast,(ECQ-P1 392FZ)	3900pF,±1%,100V		
C 87	Cer,(CC924CH1H101J)	100pF,±5%,50V		
C 88	Plast,(ECQ-P1 392FZ)	3900pF,±1%,100V		
C 89	Cer,(CC924CH1H101J)	100pF,±5%,50V*		
C 90	Cer,(CK924C1H104M)	0.1μF,±20%,50V		

( ): Manufacturer's part number

* : Selected at factory

34W81256 2/17

COMPONENT LIST OF IF 2

CKT REF	DESCRIPTION	RATING		NOTE
C 91	Plast,(ECQ-M1H 103KZ)	0.01μF,±10%,50V		
C 92	Plast,(ECQ-P1 104FZ)	0.1μF,±1%,100V		
C 93	Tant,(CS02H1D2R2M)	2.2μF,±20%,20V		
C 94	Plast,(ECQ-P1 302FZ)	3000pF,±1%,100V		
C 95	Plast,(ECQ-P1 103FZ)	0.01μF,±1%,100V		
C 96	Cer,(RPE111CH681G50)	680pF,±2%,50V		
C 97	Cer,(CC924CH1H200J)	20pF,±5%,50V		
C 98	Plast,(ECQ-P1 103FZ)	0.01μF,±1%,100V		
C 99	Cer,(RPE111CH621G50)	620pF,±2%,50V		
C 100	Cer,(CC924CH1H200J)	20pF,±5%,50V		
C 101	Plast,(ECQ-P1 104FZ)	0.1μF,±1%,100V		
C 102	Tant,(CS02H1E100M)	10μF,±20%,25V		
C 103	Tant,(CS02H1E100M)	10μF,±20%,25V		
C 104	Tant,(CS02H1D2R2M)	2.2μF,±20%,20V		
C 105	Plast,(ECQ-P1 103FZ)	0.01μF,±1%,100V		
C 106	Tant,(CS02H1V010M)	1μF,±20%,35V		
C 107	Plast,(ECQ-M1H 103KZ)	0.01μF,±10%,50V		
C 108	Plast,(ECQ-M1H 103KZ)	0.01μF,±10%,50V		
C 109	Plast,(ECQ-M1H 103KZ)	0.01μF,±10%,50V		
C 110	Elect,(CE04W1E221)	220μF,±20%,25V		
C 111	Elect,(CE04W1E221)	220μF,±20%,25V		
C 112	Plast,(ECQ-P1 162FZ)	1600pF,±1%,100V		
C 113	Cer,(CC924CH1H101J)	100pF,±5%,50V		
C 114	Cer,(CC924CH1H101J)	100pF,±5%,50V		
C 115	Plast,(ECQ-P1 162FZ)	1600pF,±1%,100V		
C 116	Plast,(ECQ-P1 472FZ)	4700pF,±1%,100V		ML422B
C 117	Cer,(CC924CH1H510J)	51pF,±5%,50V		ML422B
C 118	Cer,(CC924CH1H510J)	51pF,±5%,50V		ML422B
C 119	Plast,(ECQ-P1 472FZ)	4700pF,±1%,100V		ML422B
C 120	Cer,(CC924CH1H510J)	51pF.±5%,50V		ML422B
C 121	Plast,(ECQ-P1 472FZ)	4700pF,±1%,100V		ML422B
C 122	Cer,(CC924CH1H510J)	51pF,±5%,50V		ML422B
C 123	Plast,(ECQ-P1 472FZ)	4700pF,±1%,100V		ML422B
C 124	Plsst,(ECQ-P1 162FZ)	1600pF,±1%,100V		ML422B
C 125	Cer,(CC924CH1H101J)	100pF,±5%,50V		ML422B
C 126	Cer,(CC924CH1H101J)	100pF,±5%,50V		ML422B
C 127	Plast,(ECQ-P1 162FZ)	1600pF,±1%,100V		ML422B
C 128	Cer,(RPE111CH821G02)	820pF,±2%,50V		ML422B
C 129	Cer,(CC924CH1H430J)	43pF,±5%,50V		ML422B
C 130	Cer,(CC924CH1H430J)	43pF,±5%,50V		ML422B
C 131	Cer,(RPE111CH821G02)	820pF,±2%,50V		ML422B
C 116	Plast,(ECQ-P1 822FZ)	8200pF,±1%,100V		ML422C
C 117	Not assigned			ML422C
C 118	Not assigned			ML422C
C 119	Plast,(ECQ-P1 822FZ)	8200pF,±1%,100V		ML422C
C 120	Cer,(CC924CH1H101J)	100pF,±5%,50V		ML422C

( ): Manufacturer's part number

* : Selected at factory

34W81256	3/17

COMPONENT LIST OF IF 2

CKT REF	DESCRIPTION	RATING		NOTE
C 121	Plast,(ECQ-P1 162FZ)	1600pF,±1%,100V		ML422C
C 122	Cer,(CC924CH1H101J)	100pF,±5%,50V		ML422C
C 123	Plast,(ECQ-P1 162FZ)	1600pF,±1%,100V		ML422C
C 124	Plast,(ECQ-P1 162FZ)	1600pF,±1%,100V		ML422C
C 125	Cer,(CC924CH1H101J)	100pF,±5%,50V		ML422C
C 126	Cer,(CC924CH1H101J)	100pF,±5%,50V		ML422C
C 127	Plast,(ECQ-P1 162FZ)	1600pF,±1%,100V		ML422C
C 128	Plast,(ECQ-P1 472FZ)	4700pF,±1%,100V		ML422C
C 129	Cer,(CC924CH1H510J)	51pF,±5%,50V		ML422C
C 130	Cer,(CC924CH1H510J)	51pF,±5%,50V		ML422C
C 131	Plast,(ECQ-P1 472FZ)	4700pF,±1%,100V		ML422C
C 132	Plast,(ECQ-P1 103FZ)	0.01μF,±1%,100V		
C 133	Cer,(CC924CH1H100D)	10pF,±0.5pF,50V		
C 134	Plast,(ECQ-P1 103FZ)	0.01μF,±1%,100V		
C 135	Cer,(CC924CH1H100D)	10pF,±0.5pF,50V		
C 136	Plast,(ECQ-P1 103FZ)	0.01μF,±1%,100V		
C 137	Plast,(ECQ-P1 202FZ)	2000pF,±1%,100V		
C 138	Cer,(CC924CH1H100D)	10pF,±0.5pF,50V		
C 139	Plast,(ECQ-P1 103FZ)	0.01μF,±1%,100V		
C 140	Plast,(ECQ-P1 103FZ)	0.01μF,±1%,100V		
C 141	Elect,(CE04W1E221)	220μF,±20%,25V		
C 142	Elect,(CE04W1E221)	220μF,±20%,25V		
C 143	Elect,(CE04W1V100)	10μF,±20%,35V		
C 144	Elect,(CE04W1V100)	10μF,±20%,35V		
C 145	Tant,(CS02H1C3R3M)	3.3μF,±20%,16V		
C 146	Tant,(CS02H1CR47M)	0.47μF,±20%,16V		
C 147	Tant,(CS02H1D2R2M)	2.2μF,±20%,20V		
C 148	Cer,(CK924C1H103M)	0.01μF,±20%,50V		
C 149	Cer,(CK924C1H103M)	0.01μF,±20%,50V		
C 150	Cer,(CK924C1H103M)	0.01μF,±20%,50V		
C 151	Cer,(CK924C1H104M)	0.1μF,±20%,50V		
C 152	Cer,(CK924C1H104M)	0.1μF,±20%,50V		
C 153	Cer,(CK924C1H104M)	0.1μF,±20%,50V		
C 154	Cer,(CK924C1H472M)	4700pF,±20%,50V		
C 155	Cer,(CK924C1H222M)	2200pF,±20%,50V		
C 156	Elect,(CE04W1V220)	22μF,±20%,35V		
C 157	Cer,(CK924C1H104M)	0.1μF,±20%,50V		
C 158	Cer,(CK924C1H104M)	0.1μF,±20%,50V		
C 159	Tant,(CS02H1VR22M)	0.22μF,±20%,35V		
C 160	Cer,(CK924C1H104M)	0.1μF,±20%,50V		
C 161	Tant,(CS02H1C3R3M)	3.3μF,±20%,16V		
C 162	Cer,(CK924C1H104M)	0.1μF,±20%,50V		
C 163	Cer,(CK924C1H104M)	0.1μF,±20%,50V		
C 164	Elect,(CE04W1V220)	22μF,±20%,35V		
C 165	Tant,(CS02H1D150M)	15μF,±20%,20V		

( ): Manufacturer's part number

* : Selected at factory

34W81256	4/17

COMPONENT LIST OF IF 2

CKT REF	DESCRIPTION	RATING		NOTE
C 166	Cer,(CK924C1H104M)	0.1μF,±20%,50V		
C 167	Cer,(CK924C1H104M)	0.1μF,±20%,50V		
C 168	Not assigned			
C 169	Not assigned			
C 170	Not assigned			
C 171	Not assigned			
C 172	Not assigned			
C 173	Tant,(CS02E1VR22M)	0.22μF,±10%,35V		
C 174	Cer,(CK924C1H104M)	0.1μF,±20%,50V		
C 175	Cer,(CK924C1H103M)	0.01μF,±20%,50V		
C 176	Cer,(CK924C1H104M)	0.1μF,±20%,50V		
C 177	Cer,(CK924C1H104M)	0.1μF,±20%,50V		
C 178	Tant,(CS02H1V010M)	1μF,±20%,35V		
C 179	Cer,(CK924C1H104M)	0.1μF,±20%,50V		
C 180	Elect,(CE04W1E221)	220μF,±20%,25V		
C 181	Elect,(CE04W1E221)	220μF,±20%,25V		
C 182	Elect,(CE04W1E221)	220μF,±20%,25V		
C 183	Cer,(CK924C1H102M)	0.001μF,±20%,50V		
C 184	Cer,(CC924CH1H680J)	68pF,±5%,50V		
C 185	Cer,(CK924C1H104M)	0.1μF,±20%,50V		
C 186	Cer,(CK924C1H104M)	0.1μF,±20%,50V		
C 187	Elect,(CE04W1V220)	22μF,±20%,35V		
C 188	Cer,(CK924C1H104M)	0.1μF,±20%,50V		
C 189	Cer,(CK924C1H104M)	0.1μF,±20%,50V		
C 190	Cer,(CK924C1H104M)	0.1μF,±20%,50V		
C 191	Cer,(CK924C1H103M)	0.01μF,±20%,50V		
C 192	Elect,(CE04W1E221)	220μF,±20%,25V		
C 193	Cer,(CC924CH1H221J)	220pF,±5%,50V		
K 1	Relay,(NF-2E-12V)			
K 2	Relay,(NF-2E-12V)			
K 3	Relay,(NR-SD-12V)			
K 4	Relay,(NR-SD-12V)			
K 5	Relay,(NR-SD-12V)			
L 1	Coil,(10K17-85T)	0.36μH		
L 2	Coil,(10K17-85T)	0.36μH		
L 3	Microinductor, (LF8-100K)	10μH		

( ): Manufacturer's part number

* : Selected at factory

34W81256	5/17

COMPONENT LIST OF IF 2

CKT REF	DESCRIPTION	RATING		NOTE
J 1	Connector,(MP2.5CR-PC)			
J 2	Receptacle, (27DP-R-PC-1)			
J 3	Connector,(U-PA1021)	10 pins		
J 4	Receptacle, (27DP-R-PC-1)			
J 5	Receptacle,(27DP-R-PC-1)			
Q 1	IC,(UA733CN)			
Q 2	Tr,Si,PNP,(2SA711)			
Q 3	Tr,Si,NPN,(2SC2369)			
Q 4	IC,(TC4053BP)			
Q 5	Tr,Si,NPN,(2SC2369)			
Q 6	Di,Si,(1SS99)			
Q 7	Di,Si,(1SS99)			
Q 8	IC,(μPC258C)			
Q 9	IC,(μPC258C)			
Q 10	Di,breakdown,(RD5.1EB)	4.8 to 5.4V,400mW		
Q 11	Tr,Si,PNP,(2SA544)			
Q 12	IC,(μPA67C)			
Q 13	Di,Si,(1S953)			
Q 14	Di,Si,(1S953)			
Q 15	Di,breakdown,(RD5.1EB)	4.8 to 5.7V,400mW		
Q 16	IC,(LM317T)			
Q 17	IC,(LM337T)			
Q 18	Not assigned			
Q 19	Not assigned			
Q 20	IC,(μPC575C2)			
Q 21	IC,(μPC258C)			
Q 22	Tr,Si,NPN,(2SC943)			
Q 23	IC,(74LS290)			
Q 24	IC,(74LS290)			
Q 25	IC,(74LS00)			
Q 26	IC,(TC40H000P)			
Q 27	IC,(μPC16312H)			
Q 28	IC,(μPC16305H)			
Q 29	IC,(TC4052BP)			
Q 30	IC,(TC40H000P)			
Q 31	IC,(μPC258C)			
Q 32	IC,(μPC258C)			
Q 33	IC,(μPC258C)			
Q 34	Di,Si,(1S953)			
Q 35	Tr,Si,NPN,(2SC943)			
Q 36	IC,(CD4046BCN)			
Q 37	IC,(TC4030BP)			
Q 38	IC,(μPC258C)			

( ): Manufacturer's part number

* : Selected at factory

34W81256 | 6/17

COMPONENT LIST OF IF 2

CKT REF	DESCRIPTION	RATING		NOTE
Q 39	IC,(μPC258C)			
Q 40	IC,(μPC258C)			
Q 41	IC,(TC4053BP)			
Q 42	Di,Si,(1S953)			
Q 43	Di,Si,(1S953)			
Q 44	Di,Si,(1S953)			
Q 45	Di,Si,(1S953)			
Q 46	IC,(μPC258C)			
Q 47	Di,breakdown,(RD5.1EB)	4.8 to 5.4V,400mW		
Q 48	IC,(μPC258C)			
Q 49	Di,Si,(1S953)			
Q 50	Di,Si,(1S953)			
Q 51	Di,breakdown,(RD5.1EB)	4.8 to 5.4V,400mW		
Q 52	IC,(μPC258C)			
Q 53	IC,(μPC258C)			
Q 54	IC,(μPC258C)			
Q 55	IC,(μPC258C)			
Q 56	IC,(μPC258C)			
Q 57	IC,(μPC258C)			
Q 58	IC,(μPC258C)			
Q 59	IC,(μPC258C)			
Q 60	Tr,Si,NPN,(2SC943)			
Q 61	IC,(TC4053BP)			
Q 62	IC,(μPC258C)			
Q 63	Di,Si,(1S953)			
Q 64	Di,Si,(1S953)			
Q 65	Di,Si,(1S953)			
Q 66	IC,(μPC258C)			
Q 67	Tr,Si,NPN,(2SC943)			
Q 68	IC,(MA332)			
Q 69	Di,Si,(1S953)			
Q 70	Di,Si,(1S953)			
Q 71	IC,(μPC258C)			
Q 72	IC,(HI-201-5)			
Q 73	IC,(AD536AJD)			
Q 74	IC,(TC4052BP)			
Q 75	IC,(MC1496P)			
Q 76	IC,(μPC258C)			
Q 77	IC,(μPC258C)			
Q 78	IC,(μPC258C)			
Q 79	IC,(μPC258C)			
Q 80	Di,Si,(1S953)			
Q 81	Di,Si,(1S953)			
Q 82	IC,(μPC624D)			

( ): Manufacturer's part number

* : Selected at factory

34W81256	7/17

COMPONENT LIST OF IF 2

CKT REF	DESCRIPTION	RATING		NOTE
Q 83	IC,(μPC271C)			
Q 84	IC,(74LS122)			
Q 85	IC,(74LS193)			
Q 86	IC,(μPC258C)			
Q 87	IC,(TC4053BP)			
Q 88	Di,Si,(1SS97)			
Q 89	IC,(μPC258C)			
Q 90	IC,(μPC258C)			
Q 91	Di,breakdown,(1SZ52)	5.9 to 6.5V,250mW		
Q 92	IC,(ADC-EK12DC)			
Q 93	IC,(TC40H042P)			
Q 94	IC,(TC40H032P)			
Q 95	IC,(TC40H032P)			
Q 96	IC,(TC40H374P)			
Q 97	IC,(SN74LS244(N))			
Q 98	IC,(SN74LS244(N))			
Q 99	IC,(SN74LS244(N))			
Q 100	IC,(TC40H374P)			
Q 101	IC,(TC40H374P)			
Q 102	IC,(TC40H374P)			
Q 103	IC,(TC40H374P)			
Q 104	Tr,Si,NPN,(2SC943)			
Q 105	Di,breakdown,(RD9.1EB)	8.5 to 9.6V,400mW		
Q 106	IC,(HI-201-5)			
Q 107	IC,(μPA67C)			
R 1	MF,(NRN1/4C4 107.4ΩD)	107.4Ω,±0.5%,1/4W		
R 2	MF,(NRN1/4C4 204ΩD)	204Ω,±0.5%,1/4W		
R 3	MF,(NRN1/4C4 107.4ΩD)	107.4Ω,±0.5%,1/4W		
R 4	MF,(RN14C2E 144.4ΩC)	144.4Ω,±0.25%,1/4W		
R 5	MF,(RN14C2E 106.4ΩC)	106.4Ω,±0.25%,1/4W		
R 6	MF,(RN14C2E 144.4ΩC)	144.4Ω,±0.25%,1/4W		
R 7	MF,(RN14K2E75R0D)	75.0Ω,±0.5%,1/4W		
R 8	CF,(ARD25T750J)	75Ω,±5%,1/4W		
R 9	Not assigned			
R 10	MF,(RN14K2E1021D)	102Ω,±0.5%,1/4W		
R 11	MF,(RN14K2E4751D)	475Ω,±0.5%,1/4W		
R 12	MF,(RN14K2E1000D)	100Ω,±0.5%,1/4W		
R 13	MF,(RN14K2E1820D)	182Ω,±0.5%,1/4W		
R 14	MF,(RN14K2E5760D)	576Ω,±0.5%,1/4W		
R 15	CF,(ARD25T153J)	15kΩ,±5%,1/4W		
R 16	CF,(ARD25T601J)	600Ω,±5%,1/4W		
R 17	CF,(ARD25T561J)	561Ω,±5%,1/4W		

( ): Manufacturer's part number

* : Selected at factory

34W81256 8/17

COMPONENT LIST OF IF 2

CKT REF	DESCRIPTION	RATING		NOTE
R 18	MF,(RN14K2E2740D)	274Ω,±0.5%,1/4W		
R 19	CF,(ARD25T101J)	100Ω,±5%,1/4W		
R 20	MF,(RN14K2E3010D)	301Ω,±0.5%,1/4W		
R 21	MF,(RN14K2E1540D)	154Ω,±0.5%,1/4W		
R 22	CF,(ARD25T561J)	560Ω,±5%,1/4W		
R 23	CF,(ARD25T560J)	56Ω,±5%,1/4W		
R 24	CF,(ARD25T221J)	220Ω,±5%,1/4W		
R 25	CF,(ARD25T103J)	10kΩ,±5%,1/4W		
R 26	CF,(ARD25T183J)	18kΩ,±5%,1/4W		
R 27	CF,(ARD25T151J)	150Ω,±5%,1/4W		
R 28	CF,(ARD25T221J)	220Ω,±5%,1/4W		
R 29	CF,(ARD25T151J)	150Ω,±5%,1/4W		
R 30	CF,(ARD25T561J)	560Ω,±5%,1/4W		
R 31	CF,(ARD25T220J)	22Ω,±5%,1/4W		
R 32	CF,(ARD25T101J)	100Ω,±5%,1/4W		
R 33	CF,(ARD25T681J)	680Ω,±5%,1/4W		
R 34	CF,(ARD25T331)	330Ω,±5%,1/4W		
R 35	MF,(RN14K2E1002D)	10.0kΩ,±0.5%,1/4W		
R 36	MF,(RN14K2E1002D)	10.0kΩ,±0.5%,1/4W		
R 37	MF,(RN14K2E1001D)	1.0kΩ,±0.5%,1/4W		
R 38	MF,(RN14K2E1001D)	1.0kΩ,±0.5%,1/4W		
R 39	MF,(RN14K2E1002D)	10.0kΩ,±0.5%,1/4W		
R 40	CF,(ARD25T474J)	470kΩ,±5%,1/4W		
R 41	Var,MF,(RJ-6P 10kΩ)	10kΩ,1/2W		
R 42	MF,(RN14K2E3322D)	33.2kΩ,±0.5%,1/4W		
R 43	CF,(ARD25T472J)	4.7kΩ,±5%,1/4W		
R 44	CF,(ARD25T473J)	47kΩ,±5%,1/4W		
R 45	CF,(ARD25T153J)	15kΩ,±5%,1/4W		
R 46	MF,(RN14K2E1003D)	100kΩ,±0.5%,1/4W		
R 47	CF,(ARD25T823J)	82kΩ,±5%,1/4W		
R 48	Var,MF,(RJ-6P 100kΩ)	100kΩ,1/2W		
R 49	MF,(RN14K2E1003D)	100kΩ,±0.5%,1/4W		
R 50	CF,(ARD25T222J)	2.2kΩ,±5%,1/4W		
R 51	MF,(RN14K2E1692D)	16.9kΩ,±0.5%,1/4W		
R 52	Var,MF,(RJ-6P 1kΩ)	1kΩ,1/2W		
R 53	MF,(RN14K2E1820D)	182Ω,±0.5%,1/4W		
R 54	CF,(ARD25T682J)	6.8kΩ,±5%,1/4W		
R 55	CF,(ARD25T222J)	2.2kΩ,±5%,1/4W		
R 56	CF,(ARD25T222J)	2.2kΩ,±5%,1/4W		
R 57	CF,(ARD25T103J)	10kΩ,±5%,1/4W		
R 58	MF,(RN14K2E7500D)	750Ω,±0.5%,1/4W		
R 59	MF,(RN14K2E7150D)	715Ω,±0.5%,1/4W		
R 60	MF,(RN14K2E7150D)	715Ω,±0.5%,1/4W		
R 61	MF,(RN14K2E1820D)	182Ω,±0.5%,1/4W		
R 62	MF,(RN14K2E1820D)	182Ω,±0.5%,1/4W		
R 63	CF,(ARD25T102J)	1kΩ,±5%,1/4W		

( ): Manufacturer's part number

* : Selected at factory

34W81256	9/17

COMPONENT LIST OF IF 2

CKT REF	DESCRIPTION	RATING		NOTE
R 64	CF,(ARD25T103J)	10kΩ,±5%,1/4W		
R 65	CF,(ARD25T512J)	5.1kΩ,±5%,1/4W		ML422B
R 65	CF,(ARD25T473J)	47kΩ,±5%,1/4W		ML422C
R 66	CF,(ARD25T103J)	10kΩ,±5%,1/4W		
R 67	CF,(ARD25T471J)	470Ω,±5%,1/4W		
R 68	Var,MF,(RJ-6S 1kΩ)	1kΩ,1/2W		
R 69	CF,(ARD25T222J)	2.2kΩ,±5%,1/4W		
R 70	CF,(ARD25T473J)	47kΩ,±5%,1/4W		
R 71	CF,(ARD25T154J)	150kΩ,±5%,1/4W		
R 72	CF,(ARD25T751J)	750Ω,±5%,1/4W		
R 73	CF,(ARD25T154J)	150kΩ,±5%,1/4W		
R 74	CF,(ARD25T101J)	100Ω,±5%,1/4W		
R 75	CF,(ARD25T562J)	5.6kΩ,±5%,1/4W		
R 76	Var,MF,(RJ-6S 10kΩ)	10kΩ,1/2W		
R 77	CF,(ARD25T103J)	10kΩ,±5%,1/4W		
R 78	CF,(ARD25T473J)	47kΩ,±5%,1/4W		
R 79	CF,(ARD25T561J)	560Ω,±5%,1/4W		
R 80	CF,(ARD25T110J)	11Ω,±5%,1/4W		
R 81	CF,(ARD25T471J)	470Ω,±5%,1/4W		
R 82	CF,(ARD25T471J)	470Ω,±5%,1/4W		
R 83	CF,(ARD25T271J)	270Ω,±5%,1/4W		
R 84	CF,(ARD25T822J)	8.2kΩ,±5%,1/4W		
R 85	CF,(ARD25T472J)	4.7kΩ,±5%,1/4W		
R 86	CF,(ARD25T105J)	1MΩ,±5%,1/4W		
R 87	CF,(ARD25T105J)	1MΩ,±5%,1/4W		
R 88	CF,(ARD25T105J)	1MΩ,±5%,1/4W		
R 89	Not assigned			
R 90	Not assigned			
R 91	Not assigned			
R 92	MF,(RN14K2E2210D)	221Ω,±0.5%,1/4W		
R 93	CF,(ARD25T913J)	91kΩ,±5%,1/4W		
R 94	CF,(ARD25T152J)	1.5kΩ,±5%,1/4W		
R 95	Var,MF,(RJ-6P 50kΩ)	50kΩ,1/2W		
R 96	Var,MF,(RJ-6P 10kΩ)	10kΩ,1/2W		
R 97	Var,MF,(RJ-6P 10kΩ)	10kΩ,1/2W		
R 98	Var,MF,(RJ-6P 10kΩ)	10kΩ,1/2W		
R 99	MF,(RN14K2E2940D)	294Ω,±0.5%,1/4W		
R 100	CF,(ARD25T331J)	330Ω,±5%,1/4W		
R 101	CF,(ARD25T222J)	2.2kΩ,±5%,1/4W		
R 102	MF,(RN14K2E8251D)	8.25kΩ,±0.5%,1/4W		
R 103	MF,(RN14K2E4642D)	46.4kΩ,±0.5%,1/4W		
R 104	MF,(RN14K2E6042D)	60.4kΩ,±0.5%,1/4W		
R 105	Var,MF,(RJ-6P 5kΩ)	5kΩ,1/2W		
R 106	MF,(RN14K2E5112D)	51.1kΩ,±0.5%,1/4W		
R 107	MF,(RN14K2E1211D)	1.21kΩ,±0.5%,1/4W		
R 108	MF,(RN14K2E9092D)	90.9kΩ,±0.5%,1/4W		
R 109	MF,(RN14K2E6651D)	6.65kΩ,±0.5%,1/4W		
R 110	MF,(RN14K2E4222D)	42.2kΩ,±0.5%,1/4W		

( ): Manufacturer's part number

* : Selected at factory

34W81256 | 10/17

COMPONENT LIST OF IF 2

CKT REF	DESCRIPTION	RATING		NOTE
R 111	MF,(RN14K2E1001D)	1.0kΩ,±0.5%,1/4W		
R 112	MF,(RN14K2E4642D)	46.4kΩ,±0.5%,1/4W		
R 113	MF,(RN14K2E4222D)	42.2kΩ,±0.5%,1/4W		
R 114	MF,(RN14K2E3162D)	31.6kΩ,±0.5%,1/4W		
R 115	MF,(RN14K2E2003D)	200kΩ,±0.5%,1/4W		
R 116	MF,(RN14K2E2003D)	200kΩ,±0.5%,1/4W		
R 117	MF,(RN14K2E1212D)	12.1kΩ,±0.5%,1/4W		
R 118	MF,(RN14K2E1212D)	12.1kΩ,±0.5%,1/4W		
R 119	MF,(RN14K2E4422D)	44.2kΩ,±0.5%,1/4W		
R 120	CF,(ARD25T101J)	100Ω,±5%,1/4W		
R 121	CF,(ARD25T104J)	100kΩ,±5%,1/4W		
R 122	CF,(ARD25T223J)	22kΩ,±5%,1/4W		
R 123	MF,(RN14K2E1103D)	110kΩ,±0.5%,1/4W		
R 124	MF,(RN14K2E3012D)	30.1kΩ,±0.5%,1/4W		
R 125	Var,MF,(RJ-6P 500kΩ)	500kΩ,1/2W		
R 126	CF,(ARD25T103J)	10kΩ,±5%,1/4W		
R 127	CF,(ARD25T105J)	1MΩ,±5%,1/4W		
R 128	CF,(ARD25T512J)	5.1kΩ,±5%,1/4W		
R 129	CF,(ARD25T684J)	680kΩ,±5%,1/4W		
R 130	CF,(ARD25T105J)	1MΩ,±5%,1/4W		
R 131	MF,(RN14K2E3922D)	39.2kΩ,±0.5%,1/4W		
R 132	MF,(RN14K2E2212D)	22.1kΩ,±0.5%,1/4W		
R 133	MF,(RN14K2E1001D)	1.0kΩ,±0.5%,1/4W		
R 134	MF,(RN14K2E2003D)	200kΩ,±0.5%,1/4W		
R 135	MF,(RN14K2E4992D)	49.9kΩ,±0.5%,1/4W		
R 136	MF,(RN14K2E3482D)	34.8kΩ,±0.5%,1/4W		
R 137	MF,(RN14K2E6812D)	68.1kΩ,±0.5%,1/4W		
R 138	MF,(RN14K2E2003D)	200kΩ,±0.5%,1/4W		
R 139	MF,(RN14K2E7502D)	75.0kΩ,±0.5%,1/4W		
R 140	MF,(RN14K2E1212D)	12.1kΩ,±0.5%,1/4W		
R 141	MF,(RN14K2E1243D)	124.0kΩ,±0.5%,1/4W		
R 142	MF,(RN14K2E4992D)	49.9kΩ,±0.5%,1/4W		
R 143	MF,(RN14K2E6812D)	68.1kΩ,±0.5%,1/4W		
R 144	MF,(RN14K2E1002D)	10.0kΩ,±0.5%,1/4W		
R 145	MF,(RN14K2E3482D)	34.8kΩ,±0.5%,1/4W		
R 146	MF,(RN14K2E1872D)	18.7kΩ,±0.5%,1/4W		
R 147	MF,(RN14K2E1003D)	100kΩ,±0.5%,1/4W		
R 148	CF,(ARD25T102J)	1kΩ,±5%,1/4W		
R 149	MF,(RN14K2E1003D)	100kΩ,±0.5%,1/4W		
R 150	CF,(ARD25T102J)	1kΩ,±5%,1/4W		
R 151	MF,(RN14K2H474J)	470kΩ,±5%,1/2W		
R 152	MF,(RN14K2H474J)	470kΩ,±5%,1/2W		
R 153	MF,(RN14K2E2003D)	200kΩ,±0.5%,1/4W		
R 154	MF,(RN14K2E2003D)	200kΩ,±0.5%,1/4W		
R 155	MF,(RN14K2E2003D)	200kΩ,±0.5%,1/4W		

( ): Manufacturer's part number

* : Selected at factory

34W81256	11/17

COMPONENT LIST OF IF 2

CKT REF	DESCRIPTION	RATING		NOTE
R 156	MF,(RN14K2E2003D)	200kΩ,±0.5%,1/4W		
R 157	MF,(RN14K2E1003D)	100kΩ,±0.5%,1/4W		
R 158	MF,(RN14K2E1003D)	100kΩ,±0.5%,1/4W		
R 159	MF,(RN14K2E1002D)	10.0kΩ,±0.5%,1/4W		
R 160	MF,(RN14K2E1302D)	13.0kΩ,±0.5%,1/4W		
R 161	MF,(RN14K2E1002D)	10.0kΩ,±0.5%,1/4W		
R 162	Var,MF,(RJ-6P 2kΩ)	2kΩ,1/2W		
R 163	CF,(ARD25T472J)	4.7kΩ,±5%,1/4W		
R 164	MF,(RN14K2E1243D)	124kΩ,±0.5%,1/4W		
R 165	MF,(RN14K2E1002D)	10.0kΩ,±0.5%,1/4W		
R 166	CF,(ARD25T223J)	22kΩ,±5%,1/4W		
R 167	Var,MF,(RJ-6P 10kΩ)	10kΩ,1/2W		
R 168	Var,MF,(RJ-6P 1kΩ)	1kΩ,1/2W		
R 169	CF,(ARD25T333J)	33kΩ,±5%,1/4W		
R 170	CF,(ARD25T105J)	1MΩ,±5%,1/4W		
R 171	CF,(ARD25T473J)	47kΩ,±5%,1/4W		
R 172	CF,(ARD25T333J)	33kΩ,±5%,1/4W		
R 173	CF,(ARD25T471J)	470Ω,±5%,1/4W		
R 174	MF,(RN14K2E2002D)	20.0kΩ,±0.5%,1/4W		
R 175	MF,(RN14K2E2002D)	20.0kΩ,±0.5%,1/4W		
R 176	CF,(ARD25T822J)	8.2kΩ,±5%,1/4W		
R 177	MF,(RN14K2E1962D)	19.6kΩ,±0.5%,1/4W		ML422B
R 178	MF,(RN14K2E1001D)	1.0kΩ,±0.5%,1/4W		ML422B
R 179	MF,(RN14K2E1962D)	19.6kΩ,±0.5%,1/4W		ML422B
R 180	MF,(RN14K2E1001D)	1.0kΩ,±0.5%,1/4W		ML422B
R 181	MF,(RN14K2E1302D)	13.0kΩ,±0.5%,1/4W		ML422B
R 182	MF,(RN14K2E3920D)	392Ω,±0.5%,1/4W		ML422B
R 183	MF,(RN14K2E2002D)	20.0kΩ,±0.5%,1/4W		ML422B
R 184	MF,(RN14K2E9092D)	90.9kΩ,±0.5%,1/4W		ML422B
R 185	MF,(RN14K2E1872D)	18.7kΩ,±0.5%,1/4W		ML422B
R 186	MF,(RN14K2E9092D)	90.9kΩ,±0.5%,1/4W		ML422B
R 187	MF,(RN14K2E1872D)	18.7kΩ,±0.5%,1/4W		ML422B
R 188	MF,(RN14K2E7502D)	75.0kΩ,±0.5%,1/4W		ML422B
R 189	MF,(RN14K2E3011D)	3.01kΩ,±0.5%,1/4W		ML422B
R 190	MF,(RN14K2E2002D)	20.0kΩ,±0.5%,1/4W		ML422B
R 191	MF,(RN14K2E3652D)	36.5kΩ,±0.5%,1/4W		ML422B
R 192	MF,(RN14K2E4020D)	402Ω,±0.5%,1/4W		ML422B
R 193	MF,(RN14K2E3652D)	36.5kΩ,±0.5%,1/4W		ML422B
R 194	MF,(RN14K2E1692D)	16.9kΩ,±0.5%,1/4W		ML422B
R 195	MF,(RN14K2E6810D)	681Ω,±0.5%,1/4W		ML422B
R 196	MF,(RN14K2E4020D)	402Ω,±0.5%,1/4W		ML422B
R 197	MF,(RN14K2E2002D)	20.0kΩ,±0.5%,1/4W		ML422B
R 198	Not assigned			
R 199	MF,(RN14K2E2212D)	22.1kΩ,±0.5%,1/4W		ML422B
R 200	MF,(RN14K2E2492D)	24.9kΩ,±0.5%,1/4W		ML422B

( ): Manufacturer's part number

* : Selected at factory

34W81256 12/17

COMPONENT LIST OF IF 2

CKT REF	DESCRIPTION	RATING		NOTE
R 201	MF,(RN14K2E3741D)	3.74kΩ,±0.5%,1/4W		ML422B
R 202	MF,(RN14K2E2492D)	24.9kΩ,±0.5%,1/4W		ML422B
R 203	MF,(RN14K2E3741D)	3.74kΩ,±0.5%,1/4W		ML422B
R 204	MF,(RN14K2E1242D)	12.4kΩ,±0.5%,1/4W		ML422B
R 205	MF,(RN14K2E2002D)	20.0kΩ,±0.5%,1/4W		ML422B
R 206	MF,(RN14K2E1003D)	100.0kΩ,±0.5%,1/4W		ML422B
R 207	MF,(RN14K2E8871D)	8.87kΩ,±0.5%,1/4W		ML422B
R 208	MF,(RN14K2E1003D)	100.0kΩ,±0.5%,1/4W		ML422B
R 209	MF,(RN14K2E8871D)	8.87kΩ,±0.5%,1/4W		ML422B
R 210	MF,(RN14K2E1003D)	100.0kΩ,±0.5%,1/4W		ML422B
R 211	MF,(RN14K2E1102D)	11.0kΩ,±0.5%,1/4W		ML422B
R 212	MF,(RN14K2E4020D)	402Ω,±0.5%,1/4W		ML422B
R 213	MF,(RN14K2E8871D)	8.87kΩ,±0.5%,1/4W		ML422B
R 177	MF,(RN14K2E3162D)	31.6kΩ,±0.5%,1/4W		ML422C
R 178	MF,(RN14K2E1781D)	1.78kΩ,±0.5%,1/4W		ML422C
R 179	MF,(RN14K2E3162D)	31.6kΩ,±0.5%,1/4W		ML422C
R 180	MF,(RN14K2E1781D)	1.78kΩ,±0.5%,1/4W		ML422C
R 181	MF,(RN14K2E1302D)	13.0kΩ,±0.5%,1/4W		ML422C
R 182	MF,(RN14K2E1911D)	1.91kΩ,±0.5%,1/4W		ML422C
R 183	MF,(RN14K2E2002D)	20.0kΩ,±0.5%,1/4W		ML422C
R 184	MF,(RN14K2E4022D)	40.2kΩ,±0.5%,1/4W		ML422C
R 185	MF,(RN14K2E1912D)	19.1kΩ,±0.5%,1/4W		ML422C
R 186	MF,(RN14K2E4022D)	40.2kΩ,±0.5%,1/4W		ML422C
R 187	MF,(RN14K2E1912D)	19.1kΩ,±0.5%,1/4W		ML422C
R 188	MF,(RN14K2E1912D)	19.1kΩ,±0.5%,1/4W		ML422C
R 189	MF,(RN14K2E3010D)	301Ω,±0.5%,1/4W		ML422C
R 190	MF,(RN14K2E2002D)	20.0kΩ,±0.5%,1/4W		ML422C
R 191	MF,(RN14K2E3652D)	36.5kΩ,±0.5%,1/4W		ML422C
R 192	MF,(RN14K2E3401D)	3.4kΩ,±0.5%,1/4W		ML422C
R 193	MF,(RN14K2E3652D)	36.5kΩ,±0.5%,1/4W		ML422C
R 194	MF,(RN14K2E5112D)	51.1kΩ,±0.5%,1/4W		ML422C
R 195	MF,(RN14K2E1911D)	1.91kΩ,±0.5%,1/4W		ML422C
R 196	MF,(RN14K2E*D)	3.4k to 4.99kΩ,±0.5%,1/4W		ML422C
R 197	MF,(RN14K2E2002D)	20.0kΩ,±0.5%,1/4W		ML422C
R 198	MF,(RN14K2E1002D)	10.0kΩ,±0.5%,1/4W		ML422C
R 199	MF,(RN14K2E2212D)	22.1kΩ,±0.5%,1/4W		ML422C
R 200	MF,(RN14K2E2002D)	20.0kΩ,±0.5%,1/4W		ML422C
R 201	MF,(RN14K2E4021D)	4.02kΩ,±0.5%,1/4W		ML422C
R 202	MF,(RN14K2E2002D)	20.0kΩ,±0.5%,1/4W		ML422C
R 203	MF,(RN14K2E4021D)	4.02kΩ,±0.5%,1/4W		ML422C
R 204	MF,(RN14K2E1102D)	11.0kΩ,±0.5%,1/4W		ML422C
R 205	MF,(RN14K2E2002D)	20.0kΩ,±0.5%,1/4W		ML422C
R 206	MF,(RN14K2E4872D)	48.7kΩ,±0.5%,1/4W		ML422C
R 207	MF,(RN14K2E6980D)	698Ω,±0.5%,1/4W		ML422C
R 208	MF,(RN14K2E4872D)	48.7kΩ,±0.5%,1/4W		ML422C
R 209	MF,(RN14K2E6980D)	698Ω,±0.5%,1/4W		ML422C
R 210	MF,(RN14K2E4872D)	48.7kΩ,±0.5%,1/4W		ML422C

( ): Manufacturer's part number

* : Selected at factory

34W81256 | 13/17

COMPONENT LIST OF IF 2

CKT REF	DESCRIPTION	RATING		NOTE
R 211	MF,(RN14K2E1102D)	11.0kΩ,±0.5%,1/4W		ML422C
R 212	MF,(RN14K2E2151D)	2.15kΩ,±0.5%,1/4W		ML422C
R 213	MF,(RN14K2E6980D)	698Ω,±0.5%,1/4W		ML422C
R 214	MF,(RN14K2E2002D)	20.0kΩ,±0.5%,1/4W		
R 215	CF,(ARD25T103J)	10kΩ,±5%,1/4W		
R 216	MF,(RN14K2E1003D)	100kΩ,±0.5%,1/4W		
R 217	MF,(RN14K2E1002D)	10.0kΩ,±0.5%,1/4W		
R 218	MF,(RN14K2E1002D)	10.0kΩ,±0.5%,1/4W		
R 219	MF,(RN14K2E1472D)	14.7kΩ,±0.5%,1/4W		
R 220	MF,(RN14K2E1101D)	1.1kΩ,±0.5%,1/4W		
R 221	Var,MF,(RJ-6P 2kΩ)	2kΩ,1/2W		
R 222	MF,(RN14K2E1502D)	15.0kΩ,±0.5%,1/4W		
R 223	MF,(RN14K2E3482D)	34.8kΩ,±0.5%,1/4W		
R 224	MF,(RN14K2E1002D)	10.0kΩ,±0.5%,1/4W		
R 225	MF,(RN14K2E3401D)	3.4kΩ,±0.5%,1/4W		
R 226	MF,(RN14K2E1472D)	14.7kΩ,±0.5%,1/4W		
R 227	MF,(RN14K2E1101D)	1.1kΩ,±0.5%,1/4W		
R 228	MF,(RN14K2E1102D)	11.0kΩ,±0.5%,1/4W		
R 229	MF,(RN14K2E4990D)	499Ω,±0.5%,1/4W		
R 230	Var,MF,(RJ-6P 5kΩ)	5kΩ,1/2W		
R 231	MF,(RN14K2E6812D)	68.1kΩ,±0.5%,1/4W		
R 232	MF,(RN14K2E1002D)	10.0kΩ,±0.5%,1/4W		
R 233	MF,(RN14K2E1472D)	14.7kΩ,±0.5%,1/4W		
R 234	MF,(RN14K2E1101D)	1.1kΩ,±0.5%,1/4W		
R 235	MF,(RN14K2E1002D)	10.0kΩ,±0.5%,1/4W		
R 236	MF,(RN14K2E3482D)	34.8kΩ,±0.5%,1/4W		
R 237	MF,(RN14K2E1002D)	10.0kΩ,±0.5%,1/4W		
R 238	MF,(RN14K2E3401D)	3.4kΩ,±0.5%,1/4W		
R 239	Var,MF,(RJ-6P 2kΩ)	2kΩ,1/2W		
R 240	MF,(RN14K2E1502D)	15.0kΩ,±0.5%,1/4W		
R 241	MF,(RN14K2E1002D)	10.0kΩ,±0.5%,1/4W		
R 242	MF,(RN14K2E1002D)	10.0kΩ,±0.5%,1/4W		
R 243	MF,(RN14K2E8251D)	8.25kΩ,±0.5%,1/4W		
R 244	Var,MF,(RJ-6P 5kΩ)	5kΩ,1/2W		
R 245	MF,(RN14K2E7502D)	75.0kΩ,±0.5%,1/4W		
R 246	CF,(ARD25T104J)	100kΩ,±5%,1/4W		
R 247	CF,(ARD25T104J)	100kΩ,±5%,1/4W		
R 248	CF,(ARD25T102J)	1kΩ,±5%,1/4W		
R 249	MF,(RN14K2E4022D)	40.2kΩ,±0.5%,1/4W		
R 250	CF,(ARD25T103J)	10kΩ,±5%,1/4W		
R 251	MF,(RN14K2E4021D)	4.02kΩ,±0.5%,1/4W		
R 252	CF,(ARD25T271J)	270Ω,±5%,1/4W		
R 253	MF,(RN14K2E3012D)	30.1kΩ,±0.5%,1/4W		
R 254	CF,(ARD25T102J)	1kΩ,±5%,1/4W		
R 255	CF,(ARD25T104J)	100kΩ,±5%,1/4W		

( ): Manufacturer's part number

* : Selected at factory

34W81256 | 14/17

COMPONENT LIST OF IF 2

CKT REF	DESCRIPTION	RATING		NOTE
R 256	CF,(ARD25T152J)	1.5kΩ,±5%,1/4W		
R 257	CF,(ARD25T822J)	8.2kΩ,±5%,1/4W		
R 258	MF,(RN14K2E5112D)	51.1kΩ,±0.5%,1/4W		
R 259	Var,MF,(RJ-6P 1kΩ)	1kΩ,1/2W		
R 260	MF,(RN14K2E8250D)	825Ω,±0.5%,1/4W		
R 261	MF,(LP1/8 1kΩGT54)	1kΩ,±2%,1/8W		
R 262	CF,(ARD25T332J)	3.3kΩ,±5%,1/4W		
R 263	CF,(ARD25T123J)	12kΩ,±0.5%,1/4W		
R 264	Var,MF,(RJ-6P 10kΩ)	10kΩ,1/2W		
R 265	Var,MF,(RJ-6P 50kΩ)	50kΩ,1/2W		
R 266	CF,(ARD25T103J)	10kΩ,±5%,1/4W		
R 267	CF,(ARD25T104J)	100kΩ,±5%,1/4W		
R 268	CF,(ARD25T472J)	4.7kΩ,±5%,1/4W		
R 269	CF,(ARD25T103J)	10kΩ,±5%,1/4W		
R 270	CF,(ARD25T103J)	10kΩ,±5%,1/4W		
R 271	CF,(ARD25T103J)	10kΩ,±5%,1/4W		
R 272	CF,(ARD25T103J)	10kΩ,±5%,1/4W		
R 273	Var,MF,(RJ-6P 2kΩ)	2kΩ,1/2W		
R 274	MF,(RN14K2E4991D)	4.99kΩ,±0.5%,1/4W		
R 275	CF,(ARD25T562J)	5.6kΩ,±5%,1/4W		
R 276	CF,(ARD25T183J)	18kΩ,±5%,1/4W		
R 277	CF,(ARD25T102J)	1kΩ,±5%,1/4W		
R 278	Var,MF,(RJ-6P 100kΩ)	100kΩ,1/2W		
R 279	CF,(ARD25T394J)	390kΩ,±5%,1/4W		ML422B
R 279	CF,(ARD25T334J)	330kΩ,±5%,1/4W		ML422C
R 280	MF,(RN14K2E4421D)	4.42kΩ,±0.5%,1/4W		
R 281	MF,(RN14K2E1430D)	143Ω,±0.5%,1/4W		
R 282	Var,MF,(RJ-6P 500Ω)	500Ω,1/2W		
R 283	MF,(RN14K2E4021D)	4.02kΩ,±0.5%,1/4W		
R 284	MF,(RN14K2E3241D)	3.24kΩ,±0.5%,1/4W		
R 285	CF,(ARD25T103J)	10kΩ,±5%,1/4W		
R 286	MF,(RN14K2E3241D)	3.24kΩ,±0.5%,1/4W		
R 287	MF,(RN14K2E1011D)	1.01kΩ,±0.5%,1/4W		
R 288	Var,MF,(RJ-6P 5kΩ)	5kΩ,1/2W		
R 289	MF,(RN14K2E1001D)	1.0kΩ,±0.5%,1/4W		
R 290	MF,(LP1/8 1.2kΩGT54)	1.2kΩ,±2%,1/8W		
R 291	MF,(RN14K2E3241D)	3.24kΩ,±0.5%,1/4W		
R 292	Var,MF,(RJ-6P 1kΩ)	1kΩ,1/2W		
R 293	CF,(ARD25T104J)	100kΩ,±5%,1/4W		
R 294	CF,(ARD25T103J)	10kΩ,±5%,1/4W		
R 295	CF,(ARD25T101J)	100Ω,±5%,1/4W		
R 296	CF,(ARD25T152J)	1.5kΩ,±5%,1/4W		
R 297	MF,(RN14K2E9091D)	9.09kΩ,±0.5%,1/4W		
R 298	Var,MF,(RJ-6P 2kΩ)	2kΩ,1/2W		
R 299	CF,(ARD25T821J)	820Ω,±5%,1/4W		
R 300	Var,MF,(RJ-6P 2kΩ)	2kΩ,1/2W		

( ): Manufacturer's part number

* : Selected at factory

34W81256 15/17

COMPONENT LIST OF IF 2

CKT REF	DESCRIPTION	RATING		NOTE
R 301	MF,(RN14K2E4991D)	4.99kΩ,±0.5%,1/4W		
R 302	MF,(RN14K2E1002D)	10.0kΩ,±0.5%,1/4W		
R 303	MF,(RN14K2E1243D)	124.0kΩ,±0.5%,1/4W		
R 304	Var,MF,(RJ-6P 20kΩ)	20kΩ,1/2W		
R 305	MF,(RN14K2E1003D)	100k , 0.5%,1/4W		
R 306	MF,(RN14K2E1003D)	100kΩ,±0.5%,1/4W		
R 307	MF,(RN14K2E1001D)	1.0kΩ,±0.5%,1/4W		
R 308	MF,(RN14K2E1003D)	100kΩ,±0.5%,1/4W		
R 309	MF,(RN14K2E3241D)	3.24kΩ,±0.5%,1/4W		
R 310	Var,MF,(RJ-6P 500Ω)	500Ω,1/2W		
R 311	MF,(RN14K2E6651D)	6.65kΩ,±0.5%,1/4W		
R 312	Var,MF,(RJ-6P 500Ω)	500Ω,1/2W		
R 313	MF,(RN14K2E3921D)	3.92kΩ,±0.5%,1/4W		
R 314	Var,MF,(RJ-6P 1kΩ)	1kΩ,1/2W		
R 315	MF,(RN14K2E6811D)	6.81kΩ,±0.5%,1/4W		
R 316	MF,(RN14K2E2003D)	200kΩ,±0.5%,1/4W		
R 317	MF,(RN14K2E1002D)	10.0kΩ,±0.5%,1/4W		
R 318	MF,(RN14K2E1002D)	10.0kΩ,±0.5%,1/4W		
R 319	MF,(RN14K2E4991D)	4.99kΩ,±0.5%,1/4W		
R 320	CF,(ARD25T471J)	470Ω,±5%,1/4W		
R 321	CF,(ARD25T122J)	1.2kΩ,±5%,1/4W		
R 322	CF,(ARD25T153J)	15kΩ,±5%,1/4W		
R 323	CF,(ARD25T153J)	15kΩ,±5%,1/4W		
R 324	CF,(ARD25T621J)	620Ω,±5%,1/4W		
R 325	Var,MF,(RJ-6S 5kΩ)	5kΩ,1/2W		
R 326	CF,(ARD25T821J)	820 Ω,±5%,1/4W		
R 327	CF,(ARD25T621J)	620Ω,±5%,1/4W		
R 328	CF,(ARD25T122J)	1.2kΩ,±5%,1/4W		
R 329	CF,(ARD25T472J)	4.7kΩ,±5%,1/4W		
R 330	CF,(ARD25T332J)	3.3kΩ,±5%,1/4W		
R 331	CF,(ARD25T332J)	3.3kΩ,±5%,1/4W		
R 332	CF,(ARD25T332J)	3.3kΩ,±5%,1/4W		
R 333	CF,(ARD25T560J)	56Ω,±5%,1/4W		
R 334	CF,(ARD25T102J)	1kΩ,±5%,1/4W		
R 335	CF,(ARD25T101J)	100Ω,±5%,1/4W		
R 336	CF,(ARD25T102J)	1kΩ,±5%,1/4W		
R 337	CF,(ARD25T103J)	10kΩ,±5%,1/4W		
R 338	CF,(ARD25T682J)	68kΩ,±5%,1/4W		
R 339	CF,(ARD25T682J)	68kΩ,±5%,1/4W		
R 340	CF,(ARD25T682J)	68kΩ,±5%,1/4W		
R 341	CF,(ARD25T682J)	68kΩ,±5%,1/4W		
R 342	CF,(ARD25T103J)	10kΩ,±5%,1/4W		
R 343	CF,(ARD25T182J)	1.8kΩ,±5%,1/4W		
R 344	CF,(ARD25T183J)	18kΩ,±5%,1/4W		
R 345	Var,MF,(RJ-6P 1kΩ)	1kΩ,1/2W		

( ): Manufacturer's part number

* : Selected at factory

34W81256	16/17

COMPONENT LIST OF IF 2

CKT REF	DESCRIPTION	RATING		NOTE
R 346	Var,MF,(RJ-6P 5kΩ)	5kΩ,1/2W		
R 347	MF,(RN14K2E6651D)	6.65kΩ,±0.5%,1/4W		
R 348	CF,(ARD25T472J)	4.7kΩ,±5%,1/4W		
R 349	CF,(ARD25T682J)	6.8kΩ,±5%,1/4W		
R 350	MF,(RN14K2E1271D)	1.27kΩ,±0.5%,1/4W		
R 351	MF,(RN14K2E1001D)	1.0kΩ,±0.5%,1/4W		
R 352	MF,(RN14K2E1243D)	124kΩ,±0.5%,1/4W		
R 353	CF,(ARD25T222J)	2.2kΩ,±5%,1/4W		
R 354	MF,(RN14K2E4991D)	4.99kΩ,±0.5%,1/4W		ML422B
R 354	MF,(RN14K2E8061D)	8.06kΩ,±0.5%,1/4W		ML422C
R 355	CF,(ARD25T104J)	100kΩ,±5%, 1/4W		
R 356	CF,(ARD25T124J)	120kΩ,±5%,1/4W		
R 357	CF,(ARD25T184J)	180kΩ,±5%,1/4W		
R 358	MF,(RN14K2E1001D)	1.00kΩ,±0.5%,1/4W		
R 359	MF,(RN14K2E1151D)	1.15kΩ,±0.5%,1/4W		
X 1	XTAL OSC,(HC-12/U)	2.685MHz		
X 2	XTAL OSC,(HC-12/U)	2.315MHz		
X 3	XTAL OSC,(HC-12/U)	2.6MHz		ML422B
X 3	XTAL OSC,(HC-12/U)	2.58MHz		ML422C
T 1	Not assigned			
T 2	Trans,(ST-71)			
Z 1	P873-G35-911			

( ): Manufacturer's part number

* : Selected at factory

34W81256 17/17

COMPONENT LIST OF LOCAL

CKT REF	DESCRIPTION	RATING		NOTE
C 1	Elect,(CE04W1E470)	47μF,±20%,25V		
C 2	Elect,(CE04W1E470)	47μF,±20%,25V		
C 3	Cer,(CK924C1H104M)	0.1μF,±20%,50V		
C 4	Elect,(CE04W1E470)	47μF,±20%,25V		
C 5	Elect,(CE04W1E470)	47μF,±20%,25V		
C 6	Cer,(CK924F1H104Z)	0.1μF,+80/-20%,50V		
C 7	Cer,(CK924F1H104Z)	0.1μF,+80/-20%,50V		
C 8	Cer,(CK924F1H104Z)	0.1μF,+80/-20%,50V		
C 9	Cer,(CK924F1H104Z)	0.1μF,+80/-20%,50V		
C 10	Cer,(CK924F1H104Z)	0.1μF,+80/-20%,50V		
C 11	Cer,(CK924F1H104Z)	0.1μF,+80/-20%,50V		
C 12	Plast,(ECQ-M1H 102KZ)	1000pF,±10%,50V		
C 13	Cer,(CK924F1H104Z)	0.1μF,+80/-20%,50V		
C 14	Elect,(CE04W1E101)	100μF,±20%,25V		
C 15	Elect,(CE04W1E101)	100μF,±20%,25V		
C 16	Not assigned			
C 17	Not assigned			
C 18	Not assigned			
C 19	Not assigned			
C 20	Not assigned			
C 21	Cer,(CK924C1H103M)	0.01μF,±20%,50V		
C 22	Cer,(CC924CH1H331J)	330pF,±5%,50V		
C 23	Cer,(CK924C1H102M)	1000pF,±20%,50V		
C 24	Cer,(CK924C1H102M)	1000pF,±20%,50V		
C 25	Cer,(CK924C1H102M)	1000pF,±20%,50V		
C 26	Cer,(CK924C1H102M)	1000pF,±20%,50V		
C 27	Cer,(CK924F1H104Z)	0.1μF,+80/-20%,50V		
C 28	Cer,(CK924C1H104M)	0.1μF,±20%,50V		
C 29	Cer,(CC924CH1H470J)	47pF,±5%,50V		
C 30	Not assigned			
C 31	Not assigned			
C 32	Not assigned			
C 33	Cer,(CK924F1H104Z)	0.1μF,+80/-20%,50V		
C 34	Cer,(CK924F1H104Z)	0.1μF,+80/-20%,50V		
C 35	Cer,(CK924F1H104Z)	0.1μF,+80/-20%,50V		
C 36	Cer,(CK924F1H104Z)	0.1μF,+80/-20%,50V		
C 37	Cer,(CK924F1H104Z)	0.1μF,+80/-20%,50V		
C 38	Elect,(CE04W1A102)	1000μF,±20%,10V		
C 39	Elect,(CE04W1A101)	100μF,±20%,10V		
C 40	Elect,(CE04W1E470)	47μF,±20%,25V		
C 41	Cer,(CK924C1H472M)	4700pF,±20%,50V		
C 42	Cer,(CK924C1H472M)	4700pF,±20%,50V		
C 43	Cer,(CK924C1H472M)	4700pF,±20%,50V		
C 44	Not assigned			
C 45	Not assigned			

( ): Manufacturer's part number

* : Selected at factory

34W81257	1/18

COMPONENT LIST OF LOCAL

CKT REF	DESCRIPTION	RATING		NOTE
C 46	Cer,(CK924F1H104Z)	0.1μF,+80/-20%,50V		
C 47	Cer,(CK924F1H104Z)	0.1μF,+80/-20%,50V		
C 48	Cer,(CK924F1H104Z)	0.1μF,+80/-20%,50V		
C 49	Elect,(CE04W1E101)	100μF,±20%,25V		
C 50	Elect,(CE04W1E101)	100μF,±20%,25V		
C 51	Not assigned			
C 52	Elect,(CE04W1A101)	100μF,±20%,10V		
C 53	Not assigned			
C 54	Plast,(ECQ-M1H 472KZ)	4700pF,±10%,50V		
C 55	Elect,(CE04W1A101)	100μF,±20%,10V		
C 56	Elect,(CE04W1A101)	100μF,±20%,10V		
C 57	Not assigned			
C 58	Not assigned			
C 59	Plast,(ECQ-M1H 472KZ)	4700pF,±10%,50V		
C 60	Elect,(CE04W1E470)	47μF,±20%,25V		
C 61	Elect,(CE04W1E470)	47μF,±20%,25V		
C 62	Not assigned			
C 63	Tant,(CS02H1V010M)	1μF,±20%,35V		
C 64	Not assigned			
C 65	Not assigned			
C 66	Not assigned			
C 67	Cer,(CC924CH1H150J)	15pF,±5%,50V		
C 68	Cer,(CC924CH1H050D)	5pF,±0.5pF,50V		
C 69	Cer,(CC924CH1H050D)	5pF,±0.5pF,50V		
C 70	Cer,(CK924C1H102M)	1000pF,±20%,50V		
C 71	Cer,(CK924C1H102M)	1000pF,±20%,50V		
C 72	Elect,(CE04W1E470)	47μF,±20%,25V		
C 73	Cer,(CK924F1H104Z)	0.1μF,+80/-20%,50V		
C 74	Cer,(CK924C1H102M)	1000pF,±20%,50V		
C 75	Not assigned			
C 76	Cer,(CK924C1H102M)	1000pF,±20%,50V		
C 77	Cer,(CK924C1H102M)	1000pF,±20%,50V		
C 78	Cer,(CK924F1H104Z)	0.1μF,+80/-20%,50V		
C 79	Cer,(CK924F1H104Z)	0.1μF,+80/-20%,50V		
C 80	Not assigned			
C 81	Not assigned			
C 82	Elect,(CE04W1A102)	1000μF,±20%,10V		
C 83	Not assigned			
C 84	Not assigned			
C 85	Not assigned			
C 86	Not assigned			
C 87	Not assigned			
C 88	Cer,(CK924F1H104Z)	0.1μF,+80/-20%,50V		
C 89	Cer,(CK924F1H104Z)	0.1μF,+80/-20%,50V		
C 90	Cer,(CK924F1H104Z)	0.1μF,+80/-20%,50V		

( ): Manufacturer's part number

* : Selected at factory

34W81257	2/18

COMPONENT LIST OF LOCAL

CKT REF	DESCRIPTION	RATING		NOTE
C 91	Elect,(CE04W1E470)	47μF,±20%,25V		
C 92	Cer,(CK924C1H473M)	0.047μF,±20%,50V		
C 93	Cer,(CK924C1H223M)	0.022μF,±20%,50V		
C 94	Plast,(ECQ-M1H 103KZ)	0.01μF,±10%,50V		
C 95	Cer,(CK924F1H104Z)	0.1μF,+80/-20%,50V		
C 96	Cer,(CK924C1H102M)	1000pF,±20%,50V		
C 97	Cer,(CK924C1H102M)	1000pF,±20%,50V		
C 98	Cer,(CC924CH1H050D)	5pF,±0.5pF,50V		
C 99	Cer,(CC924CH1H050D)	5pF,±0.5pF,50V		
C 100	Cer,(CC924F1H104Z)	0.1μF,+80/-20%,50V		
C 101	Cer,(CK924C1H472M)	4700pF,±20%,50V		
C 102	Cer,(CK924C1H472M)	4700pF,±20%,50V		
C 103	Elect,(CE04W1E470)	47μF,±20%,25V		
C 104	Cer,(CK924C1H102M)	1000pF,±20%,50V		
C 105	Cer,(CK924F1H104Z)	0.1μF,+80/-20%,50V		
C 106	Cer,(CK924F1H104Z)	0.1μF,+80/-20%,50V		
C 107	Cer,(CK924F1H104Z)	0.1μF,+80/-20%,50V		
C 108	Cer,(CK924C1H102M)	1000pF,±20%,50V		
C 109	Cer,(CK924F1H104Z)	0.1μF,+80/-20%,50V		
C 110	Cer,(CK924F1H104Z)	0.1μF,+80/-20%,50V		
C 111	Cer,(CK924C1H102M)	1000pF,±20%,50V		
C 112	Not assigned			
C 113	Cer,(CK924F1H104Z)	0.1μF,+80/-20%,50V		
C 114	Cer,(CK924F1H104Z)	0.1μF,+80/-20%,50V		
C 115	Cer,(CK924F1H104Z)	0.1μF,+80/-20%,50V		
C 116	Cer,(CK924F1H104Z)	0.1μF,+80/-20%,50V		
C 117	Cer,(CK924F1H104Z)	0.1μF,+80/-20%,50V		
C 118	Cer,(CK924C1H472M)	4700pF,±20%,50V		
C 119	Cer,(CK924F1H104Z)	0.1μF,+80/-20%,50V		
C 120	Cer,(CK924C1H472M)	4700pF,±20%,50V		
C 121	Cer,(CC924CH1H101J)	100pF,±5%,50V		
C 122	Cer,(CK924F1H104Z)	0.1μF,+80/-20%,50V		
C 123	Not assigned			
C 124	Not assigned			
C 125	Cer,(CK924F1H104Z)	0.1μF,+80/-20%,50V		
C 126	Elect,(CE04W1E470)	47μF,±20%,25V		
C 127	Cer,(CK924C1H104M)	0.1μF,±20%,50V		
C 128	Not assigned			
C 129	Plast,(ECQ-M1H 473KZ)	0.047μF,±10%,50V		
C 130	Plast,(ECQ-M1H 472KZ)	4700pF,±10%,50V		
C 131	Cer,(CK924C1H102M)	1000pF,±20%,50V		
C 132	Cer,(CK924C1H102M)	1000pF,±20%,50V		
C 133	Cer,(CC924CH1H050D)	5pF,±0.5pF,50V		
C 134	Cer,(CC924CH1H050D)	5pF,±0.5pF,50V		
C 135	Cer,(CK924C1H472M)	4700pF,±20%,50V		

( ): Manufacturer's part number

* : Selected at factory

34W81257 3/18

COMPONENT LIST OF LOCAL

CKT REF	DESCRIPTION	RATING		NOTE
C 136	Cer,(CK924C1H472M)	4700pF,±20%,50V		
C 137	Elect,(CE04W1E470)	47μF,±20%,25V		
C 138	Cer,(CK924F1H104Z)	0.1μF,+80/-20%,50V		
C 139	Cer,(CK924C1H102M)	1000pF,±20%,50V		
C 140	Cer,(CK924F1H104Z)	0.1μF,+80/-20%,50V		
C 141	Cer,(CK924F1H104Z)	0.1μF,+80/-20%,50V		
C 142	Cer,(CK924F1H104Z)	0.1μF,+80/-20%,50V		
C 143	Cer,(CK924C1H102M)	1000pF,±20%,50V		
C 144	Cer,(CK924F1H104Z)	0.1μF,+80/-20%,50V		
C 145	Cer,(CK924F1H104Z)	0.1μF,+80/-20%,50V		
C 146	Cer,(CK924C1H102M)	1000pF,±20%,50V		
C 147	Cer,(CK924F1H104Z)	0.1μF,+80/-20%,50V		
C 148	Cer,(CK924F1H104Z)	0.1μF,+80/-20%,50V		
C 149	Cer,(CK924F1H104Z)	0.1μF,+80/-20%,50V		
C 150	Cer,(CK924F1H104Z)	0.1μF,+80/-20%,50V		
C 151	Cer,(CK924F1H104Z)	0.1μF,+80/-20%,50V		
C 152	Cer,(CK924F1H104Z)	0.1μF,+80/-20%,50V		
C 153	Cer,(CK924C1H472M)	4700pF,±20%,50V		
C 154	Cer,(CK924F1H104Z)	0.1μF,+80/-20%,50V		
C 155	Cer,(CK924C1H472M)	4700pF,±20%,50V		
C 156	Cer,(CC924CH1H101J)	100pF,±5%,50V		
C 157	Cer,(CK924F1H104Z)	0.1μF,+80/-20%,50V		
C 158	Cer,(CK924F1H104Z)	0.1μF,+80/-20%,50V		
C 159	Plast,(ECQ-M1H 102KZ)	1000pF,±10%,50V		
C 160	Elect,(CE04W1A471)	470μF,±20%,10V		
C 161	Elect,(CE04W1E470)	47μF,±20%,25V		
C 162	Elect,(CE04W1E470)	47μF,±20%,25V		
C 163	Not assigned			
C 164	Cer,(CK924F1H104Z)	0.1μF,+80/-20%,50V		
C 165	Elect,(CE04W1E470)	47μF,±20%,25V		
C 166	Elect,(CE04W1E470)	47μF,±20%,25V		
C 167	Cer,(RPE113C474K50)	0.47μF,±10%,50V		
C 168	Elect,(CE04W1E101)	100μF,±20%,25V		
C 169	Plast,(ECQ-M1H 473KZ)	0.047μF,±10%,50V		
C 170	Cer,(CK924F1H104Z)	0.1μF,+80/-20%,50V		
C 171	Cer,(CK924F1H104Z)	0.1μF,+80/-20%,50V		
C 172	Cer,(CK924C1H103M)	0.01μF,±20%,50V		
C 173	Cer,(CK924C1H102M)	1000pF,±20%,50V		
C 174	Cer,(CK924C1H102M)	1000pF,±20%,50V		
C 175	Cer,(CC924CH1H050D)	5pF,±0.5pF,50V		
C 176	Cer,(CC924CH1H050D)	5pF,±0.5pF,50V		
C 177	Cer,(CK924C1H472M)	4700pF,±20%,50V		
C 178	Cer,(CK924C1H472M)	4700pF,±20%,50V		
C 179	Elect,(CE04W1E470)	47μF,±20%,25V		
C 180	Cer,(CK924F1H104Z)	0.1μF,+80/-20%,50V		

( ): Manufacturer's part number

* : Selected at factory

34W81257	4/18

COMPONENT LIST OF LOCAL

CKT REF	DESCRIPTION	RATING		NOTE
C 181	Cer,(CK924C1H102M)	1000pF,±20%,50V		
C 182	Cer,(CK924C1H102M)	1000pF,±20%,50V		
C 183	Cer,(CK924C1H102M)	1000pF,±20%,50V		
C 184	Cer,(CK924C1H102M)	1000pF,±20%,50V		
C 185	Cer,(CK924C1H102M)	1000pF,±20%,50V		
C 186	Cer,(CK924F1H104Z)	0.1μF,+80/-20%,50V		
C 187	Cer,(CK924C1H102M)	1000pF,±20%,50V		
C 188	Cer,(CK924F1H104Z)	0.1μF,+80/-20%,50V		
C 189	Cer,(CK924C1H102M)	1000pF,±20%,50V		
C 190	Cer,(CK924F1H104Z)	0.1μF,+80/-20%,50V		
C 191	Cer,(CK924C1H102M)	1000pF,±20%,50V		
C 192	Cer,(CK924C1H102M)	1000pF,±20%,50V		
C 193	Cer,(CK924C1H472M)	4700pF,±20%,50V		
C 194	Cer,(CK924F1H104Z)	0.1μF,+80/-20%,50V		
C 195	Cer,(CK924F1H104Z)	0.1μF,+80/-20%,50V		
C 196	Cer,(HCC73CH2D100C)	10pF,±0.25pF,200V		
C 197	Cer,(HCC73CH2D100C)	10pF,±0.25pF,200V		
C 198	Cer,(CC924CH1H151J)	150pF,±5%,50V		
C 199	Cer,(CC924CH1H331J)	330pF,±5%,50V		
C 200	Cer,(CC924CH1H331J)	330pF,±5%,50V		
C 201	Cer,(CC924CH1H151J)	150pF,±5%,50V		
C 202	Cer,(CK924C1H472M)	4700pF,±20%,50V		
C 203	Cer,(CK924C1H472M)	4700pF,±20%,50V		
C 204	Cer,(CK924C1H472M)	4700pF,±20%,50V		
C 205	Cer,(CK924C1H472M)	4700pF,±20%,50V		
C 206	Cer,(CK924C1H472M)	4700pF,±20%,50V		
C 207	Not assigned			
C 208	Cer,(CK924C1H472M)	4700pF,±20%,50V		
C 209	Not assigned			
C 210	Not assigned			
C 211	Not assigned			
C 212	Cer,(CK924F1H104Z)	0.1μF,+80/-20%,50V		
C 213	Not assigned			
C 214	Cer,(CK924C1H102M)	1000pF,±20%,50V		
C 215	Cer,(CK924C1H102M)	1000pF,±20%,50V		
C 216	Not assigned			
C 217	Cer,(CC924CH1H470J)	47pF,±5%,50V		
C 218	Cer,(CC924CH1H101J)	100pF,±5%,50V		
C 219	Cer,(CC924CH1H470J)	47pF,±5%,50V		
C 220	Elect,(CE04W1A102)	1000μF,±20%,10V		
C 221	Elect,(CE04W1A102)	1000μF,±20%,10V		
C 222	Elect,(CE04W1A102)	1000μF,±20%,10V		
C 223	Elect,(CE04W1A102)	1000μF,±20%,10V		
C 224	Elect,(CE04W1A102)	1000μF,±20%,10V		
C 225	Cer,(CK924C1H472M)	4700pF,±20%,50V		

( ): Manufacturer's part number

* : Selected at factory

34W81257 | 5/18

COMPONENT LIST OF LOCAL

CKT REF	DESCRIPTION	RATING		NOTE
C 226	Cer,(RPE111CH271G50)	270pF,±2%,50V		
C 227	Cer,(RPE111CH391G50)	390pF,±2%,50V		
C 228	Cer,(RPE111CH431G50)	430pF,±2%,50V		
C 229	Cer,(RPE111CH391G50)	390pF,±2%,50V		
C 230	Cer,(RPE111CH271G50)	270pF,±2%,50V		
C 231	Cer,(CK924C1H103M)	0.01μF,±20%,50V		
C 232	Cer,(CK924C1H103M)	0.01μF,±20%,50V		
C 233	Elect,(CE04W1E470)	47μF,±20%,25V		
C 234	Cer,(CK924C1H103M)	0.01μF,±20%,50V		
C 235	Cer,(CC924CH1H151J)	150pF,±5%,50V		
C 236	Not assigned			
C 237	Cer,(HCC73CH2D100C)	10pF,±0.25pF,200V		
C 238	Cer,(HCC73CH2D100C)	10pF,±0.25pF,200V		
C 239	Cer,(CK924C1H102M)	1000pF,±20%,50V		
C 240	Cer,(CK924C1H102M)	1000pF,±20%,50V		
C 241	Cer,(CK924C1H102M)	1000pF,±20%,50V		
C 242	Cer,(CK924C1H102M)	1000pF,±20%,50V		
C 243	Cer,(CK924F1H104Z)	0.1μF,+80/-20%,50V		
J 1	Connector,(U-SA2250)	22 pins		
J 2	Connector,(U-SA0501)	5 pins		
L 1	Not assigned			
L 2	Microinductor, (LF8-101K)	100μH		
L 3	Microinductor, (LF8-101K)	100μH		
L 4	Microinductor, (LF8-101K)	100μH		
L 5	Not assigned			
L 6	Coil,(SCN-5962A)	0.68μH		*
L 7	Not assigned			
L 8	Not assigned			
L 9	Microinductor, (LH1-471K)	470μH		
L 10	Microinductor, (LF8-101K)	100μH		
L 11	Microinductor, (LF8-101K)	100μH		
L 12	Microinductor, (LH1-102K)	1mH		
L 13	Not assigned			

( ): Manufacturer's part number

* : Selected at factory

34W81257 6/18

COMPONENT LIST OF LOCAL

CKT REF	DESCRIPTION	RATING		NOTE
L 14	Not assigned			
L 15	Coil,(10K17-35T)	0.1μH		*
L 16	Not assigned			
L 17	Not assigned			
L 18	Microinductor, (LF8-221K)	220μH		
L 19	Microinductor, (LF8-101K)	100μH		
L 20	Microinductor, (LF8-101K)	100μH		
L 21	Not assigned			
L 22	Microinductor, (LF8-221K)	220μH		
L 23	Microinductor, (LF8-221K)	220μH		
L 24	Coil,(10K17-45T)	0.16μH		*
L 25	Microinductor, (LF8-101K)	100μH		
L 26	Microinductor, (LF8-101K)	100μH		
L 27	Microinductor, (LF8-221K)	220μH		
L 28	Microinductor, (LF8-101K)	100μH		
L 29	Not assigned			
L 30	Not assigned			
L 31	Microinductor, (LF8-221K)	220μH		
L 32	Microinductor, (LF8-221K)	220μH		
L 33	Coil,(10K17-65T)	0.18μH		*
L 34	Not assigned			
L 35	Not assigned			
L 36	Microinductor, (LH1-102K)	1mH		
L 37	Microinductor, (LF8-101K)	100μH		
L 38	Microinductor, (LF8-221K)	220μH		
L 39	Microinductor, (LF8-221K)	220μH		
L 40	Coil,(10K17-35T)	0.1μH		*
L 41	Microinductor, (LF8-101K)	100μH		
L 42	Not assigned			
L 43	Coil,(SP0408-1R0K)	1μH		
L 44	Coil,(SP0408-1R0K)	1μH		
L 45	Coil,(SP0408-1R0K)	1μH		

( ): Manufacturer's part number

* : Selected at factory

34W81257 7/18

COMPONENT LIST OF LOCAL

CKT REF	DESCRIPTION	RATING		NOTE
L 46	Microinductor, (LF8-101K)	100μH		
L 47	Microinductor, (LF8-100K)	10μH		
L 48	Microinductor, (LF8-100K)	10μH		
L 49	Not assigned			
L 50	Microinductor, (LF8-100K)	10μH		
L 51	Microinductor, (LF8-100K)	10μH		
L 52	Microinductor, (LF8-100K)	10μH		
L 53	Coil,(342T40885B)	10μH		
L 54	Coil,(342T40885B)	10μH		
L 55	Coil,(SP0408-R10M)	0.1μH		
L 56	Coil,(SP0408-R10M)	0.1μH		
Q 1	IC,(TC40H042P)			
Q 2	IC,(TC40H004P)			
Q 3	IC,(TC40H002P)			
Q 4	IC,(TC40H374P)			
Q 5	IC,(TC40H374P)			
Q 6	IC,(TC40H374P)			
Q 7	IC,(TC40H374P)			
Q 8	IC,(μPC251C)			
Q 9	Di,Si,(1S953)			
Q 10	Di,Si,(1S953)			
Q 11	Tr,Si,NPN,(2SC943)			
Q 12	Tr,Si,PNP,(2SA603)			
Q 13	Not assigned			
Q 14	IC,(TC40H004P)			
Q 15	IC,(TC40H004P)			
Q 16	IC,(μPC624D)			
Q 17	Di,breakdown,(RD5.1E (B))	4.8 to 5.4V,400mW		
Q 18	Not assigned			
Q 19	Not assigned			
Q 20	Not assigned			
Q 21	Tr,Si,NPN,(2SC2368)			
Q 22	Tr,Si,NPN,(2SC2368)			
Q 23	IC,(HD74S175)			
Q 24	IC,(HD74S02)			
Q 25	Not assigned			

( ): Manufacturer's part number

* : Selected at factory

34W81257	8/18

COMPONENT LIST OF LOCAL

CKT REF	DESCRIPTION	RATING		NOTE
Q 26	Not assigned			
Q 27	IC,(HD74LS290P)			
Q 28	IC,(MC4044P)			
Q 29	IC,(HD74LS03P)			
Q 30	Di,breakdown,(RD3.9E (B))	3.7 to 4.1V,400mW		
Q 31	Di,breakdown,(RD6.2E (B))	5.8 to 6.6V,400mW		
Q 32	Tr,SI,PNP,(2SA711)			
Q 33	Tr,Si,NPN,(2SC2368)			
Q 34	IC,(μPC251C)			
Q 35	IC,(μPC251C)			
Q 36	Tr,Si,PNP,(2SA578)			
Q 37	Tr,Si,NPN,(2SC1010)			
Q 38	Not assigned			
Q 39	Di,breakdown,(RD5.1E (B))	4.8 to 5.4V,400mW		
Q 40	Di,Si,(1S953)			
Q 41	Not assigned			
Q 42	Di,Si,(1SV50)			
Q 43	Di,Si,(1SV50)			
Q 44	J-FET,N ch,(2SK192AGR)			
Q 45	J-FET,N ch,(2SK192AGR)			
Q 46	IC,(HD74S112)			
Q 47	Tr,Si,NPN,(2SC2368)			
Q 48	Tr,Si,NPN,(2SC2368)			
Q 49	Tr,Si,NPN,(2SC2368)			
Q 50	Not assigned			
Q 51	IC,(HD74LS74AP)			
Q 52	IC,(HD74LS74AP)			
Q 53	IC,(HD74LS02P)			
Q 54	Not assigned			
Q 55	Not assigned			
Q 56	IC,(μPC624D)			
Q 57	IC,(μPC624D)			
Q 58	IC,(μPC624D)			
Q 59 to Q 73	IC,(HD74LS283P)			
Q 74	IC,(SN74LS374N)			
Q 75	IC,(HD74LS174P)			
Q 76	IC,(HD74LS174P)			
Q 77	Not assigned			
Q 78	Not assigned			
Q 79	IC,(HD74LS290P)			
Q 80	IC,(HD74LS290P)			

( ): Manufacturer's part number

* : Selected at factory

34W81257	9/18

COMPONENT LIST OF LOCAL

CKT REF	DESCRIPTION	RATING		NOTE
Q 81	IC,(CX23065)			
Q 82	Tr,Si,NPN,(2SC1280A Ⓢ)			
Q 83	Tr,Si,NPN,(2SC1010)			
Q 84	Di,Si,(1SV50)			
Q 85	Di,Si,(1SV50)			
Q 86	Di,Si,(1SV50)			
Q 87	Di,Si,(1SV50)			
Q 88	J-FET,N ch,(2SK192AGR)			
Q 89	J-FET,N ch,(2SK192AGR)			
Q 90	Tr,Si,NPN,(2SC2368)			
Q 91	Tr,Si,NPN,(2SC2368)			
Q 92	Tr,Si,NPN,(2SC2368)			
Q 93	Tr,Si,NPN,(2SC2368)			
Q 94	Tr,Si,NPN,(2SC2368)			
Q 95	Tr,Si,NPN,(2SC2368)			
Q 96	IC,(HD10105)			
Q 97	IC,(HD10131)			
Q 98	IC,(HD10131)			
Q 99	Tr,Si,NPN,(2SC2368)			
Q 100	IC,(HD74LS161P)			
Q 101	IC,(HD74LS161P)			
Q 102	IC,(HD74LS161P)			
Q 103	IC,(HD74LS30P)			
Q 104	IC,(HD74LS00P)			
Q 105	IC,(HD74S04)			
Q 106	Not assigned			
Q 107	Not assigned			
Q 108	IC,(HD74LS290P)			
Q 109	IC,(CX23065)			
Q 110	Tr,Si,NPN,(2SC1280A Ⓢ)			
Q 111	Tr,Si,NPN,(2SC1010)			
Q 112	Di,Si,(1SV50)			
Q 113	Di,Si,(1SV50)			
Q 114	Di,Si,(1SV50)			
Q 115	Di,Si,(1SV50)			
Q 116	J-FET,N ch,(2SK192AGR)			
Q 117	J-FET,N ch,(2SK192AGR)			
Q 118	IC,(μPC624D)			
Q 119	Not assigned			
Q 120	Tr,Si,NPN,(2SC2368)			
Q 121	Tr,Si,NPN,(2SC2368)			
Q 122	Tr,Si,NPN,(2SC2368)			
Q 123	Tr,Si,NPN,(2SC2368)			
Q 124	Tr,Si,NPN,(2SC2368)			
Q 125	Tr,Si,NPN,(2SC2368)			

( ): Manufacturer's part number

* : Selected at factory

34W81257 10/18

COMPONENT LIST OF LOCAL

CKT REF	DESCRIPTION	RATING		NOTE
Q 126	Not assigned			
Q 127	IC,(HD10105)			
Q 128	IC,(HD10131)			
Q 129	IC,(HD10131)			
Q 130	Tr,Si,NPN,(2SC2368)			
Q 131	IC,(HD74LS161P)			
Q 132	IC,(HD74LS161P)			
Q 133	IC,(HD74LS20P)			
Q 134	IC,(HD74LS00P)			
Q 135	IC,(TC40H004P)			
Q 136	IC,(HD74S04)			
Q 137	Not assigned			
Q 138	IC,(μPC258C)			
Q 139	IC,(μPC258C)			
Q 140	Not assigned			
Q 141	IC,(HD10551)			
Q 142	IC,(HD74LS161P)			
Q 143	IC,(CX23065)			
Q 144	Tr,Si,NPN,(2SC1010)			
Q 145	Tr,Si,NPN,(2SC1010)			
Q 146	Di,Si,(1S953)			
Q 147	Di,Si,(1SV50)			
Q 148	Di,Si,(1SV50)			
Q 149	Di,Si,(1SV50)			
Q 150	Di,Si,(1SV50)			
Q 151	J-FET,N ch,(2SK192AGR)			
Q 152	J-FET,N ch,(2SK192AGR)			
Q 153	Not assigned			
Q 154	Not assigned			
Q 155	Not assigned			
Q 156	Tr,Si,NPN,(2SC2368)			
Q 157	Tr,Si,NPN,(2SC2368)			
Q 158	Tr,Si,NPN,(2SC2368)			
Q 159	Tr,Si,NPN,(2SC2368)			
Q 160	Not assigned			
Q 161	IC,(TA7302P)			
Q 162	Tr,Si,NPN,(2SC943)			
Q 163	Not assigned			
Q 164	Not assigned			
Q 165	IC,(HD10551)			
Q 166	Not assigned			
Q 167	Not assigned			
Q 168	IC,(TA7302P)			
Q 169	IC,(HD74LS00P)			
Q 170	Tr,Si,NPN,(2SC2368)			

( ): Manufacturer's part number

* : Selected at factory

34W81257 11/18

COMPONENT LIST OF LOCAL

CKT REF	DESCRIPTION	RATING		NOTE
R 1	CF,(ARD25T561J)	560Ω,±5%,1/4W		
R 2	CF,(ARD25T472J)	4.7kΩ,±5%,1/4W		
R 3	CF,(ARD25T182J)	1.8kΩ,±5%,1/4W		
R 4	Var,MF,(RJ-6P 2kΩ)	2kΩ,1/2W		*
R 5	CF,(ARD25T472J)	4.7kΩ,±5%,1/4W		
R 6	CF,(ARD25T472J)	4.7kΩ,±5%,1/4W		
R 7	CF,(ARD25T561J)	560Ω,±5%,1/4W		
R 8	Not assigned			
R 9	CF,(ARD25T221J)	220Ω,±5%,1/4W		
R 10	CF,(ARD25T470J)	47Ω,±5%,1/4W		
R 11	Not assigned			
R 12	Not assigned			
R 13	CF,(ARD25T332J)	3.3kΩ,±5%,1/4W		
R 14	CF,(ARD25T222J)	2.2kΩ,±5%,1/4W		
R 15	CF,(ARD25T151J)	150Ω,±5%,1/4W		
R 16	CF,(ARD25T221J)	220Ω,±5%,1/4W		
R 17	CF,(ARD25T101J)	100Ω,±5%,1/4W		
R 18	CF,(ARD25T392J)	3.9kΩ,±5%,1/4W		
R 19	CF,(ARD25T182J)	1.8kΩ,±5%,1/4W		
R 20	CF,(ARD25T101J)	100Ω,±5%,1/4W		
R 21	CF,(ARD25T221J)	220Ω,±5%,1/4W		
R 22	CF,(ARD25T332J)	3.3kΩ,±5%,1/4W		
R 23	CF,(ARD25T*J)	100 to 330Ω,±5%,1/4W		* 150Ω
R 24	Not assigned			
R 25	Not assigned			
R 26	CF,(ARD25T182J)	1.8kΩ,±5%,1/4W		
R 27	CF,(ARD25T102J)	1kΩ,±5%,1/4W		
R 28	CF,(ARD25T471J)	470Ω,±5%,1/4W		
R 29	CF,(ARD25T102J)	1kΩ,±5%,1/4W		
R 30	CF,(ARD25T822J)	8.2kΩ,±5%,1/4W		
R 31	CF,(ARD25T821J)	820Ω,±5%,1/4W		
R 32	Var,MF,(RJ-6P 500Ω)	500Ω,1/2W		*
R 33	CF,(ARD25T222J)	2.2kΩ,±5%,1/4W		
R 34	CF,(ARD25T202J)	2kΩ,±5%,1/4W		
R 35	CF,(ARD25T103J)	10kΩ,±5%,1/4W		
R 36	MF,(RN14K2E4991D)	4.99kΩ,±0.5%,1/4W		
R 37	MF,(RN14K2E*D)	40.2k to 49.9kΩ, ±0.5%,1/4W		* 49.9kΩ
R 38	MF,(RN14K2E3241D)	3.24kΩ,±0.5%,1/4W		
R 39	MF,(RN14K2E1002D)	10.0kΩ,±0.5%,1/4W		
R 40	CF,(ARD25T472J)	4.7kΩ,±5%,1/4W		
R 41	CF,(ARD25T222J)	2.2kΩ,±5%,1/4W		
R 42	CF,(ARD25T102J)	1kΩ,±5%,1/4W		
R 43	CF,(ARD25T102J)	1kΩ,±5%,1/4W		
R 44	CF,(ARD25T331J)	330Ω,±5%,1/4W		
R 45	CF,(ARD25T332J)	3.3kΩ,±5%,1/4W		

( ): Manufacturer's part number

* : Selected at factory

34W81257 12/18

COMPONENT LIST OF LOCAL

CKT REF	DESCRIPTION	RATING		NOTE
R 46	CF,(ARD25T332J)	3.3kΩ,±5%,1/4W		
R 47	CF,(ARD25T331J)	330Ω,±5%,1/4W		
R 48	Var,MF,(RJ-6P 5kΩ)	5kΩ,1/2W		*
R 49	CF,(ARD25T221J)	220Ω,±5%,1/4W		
R 50	CF,(ARD25T222J)	2.2kΩ,±5%,1/4W		
R 51	CF,(ARD25T680J)	68Ω,±5%,1/4W		
R 52	CF,(ARD25T332J)	3.3kΩ,±5%,1/4W		
R 53	CF,(ARD25T680J)	68Ω,±5%,1/4W		
R 54	CF,(ARD25T103J)	10kΩ,±5%,1/4W		
R 55	CF,(ARD25T822J)	8.2kΩ,±5%,1/4W		
R 56	CF,(ARD25T561J)	560Ω,±5%,1/4W		
R 57	CF,(ARD25T680J)	68Ω,±5%,1/4W		
R 58	CF,(ARD25T221J)	220Ω,±5%,1/4W		
R 59	CF,(ARD25T681J)	680Ω,±5%,1/4W		
R 60	CF,(ARD25T681J)	680Ω,±5%,1/4W		
R 61	MF,(RN14K2E1002D)	10.0kΩ,±0.5%,1/4W		
R 62	MF,(RN14K2E1002D)	10.0kΩ,±0.5%,1/4W		
R 63	MF,(RN14K2E4991D)	4.99kΩ,±0.5%,1/4W		
R 64	CF,(ARD25T104J)	100kΩ,±5%,1/4W		
R 65	CF,(ARD25T474J)	470kΩ,±5%,1/4W		
R 66	CF,(ARD25T331J)	330Ω,±5%,1/4W		
R 67	Var,MF,(RJ-6P 10kΩ)	10kΩ,1/2W		*
R 68	Not assigned			
R 69	Not assigned			
R 70	MF,(RN14K2E2491D)	2.49kΩ,±0.5%,1/4W		
R 71	MF,(RN14K2E2491D)	2.49kΩ,±0.5%,1/4W		
R 72	MF,(RN14K2E1242D)	12.4kΩ,±0.5%,1/4W		
R 73	MF,(RN14K2E9391D)	9.39kΩ,±0.5%,1/4W		
R 74	MF,(RN14K2E1003D)	100kΩ,±0.5%,1/4W		
R 75	MF,(RN14K2E1003D)	100kΩ,±0.5%,1/4W		
R 76	CF,(ARD25T391J)	390Ω,±5%,1/4W		
R 77	CF,(ARD25T820J)	82Ω,±5%,1/4W		
R 78	Var,MF,(RJ-6P 1kΩ)	1kΩ,1/2W		*
R 79	CF,(ARD25T102J)	1kΩ,±5%,1/4W		
R 80	CF,(ARD25T221J)	220Ω,±5%,1/4W		
R 81	Var,MF,(RJ-6P 10kΩ)	10kΩ,1/2W		*
R 82	CF,(ARD25T102J)	1kΩ,±5%,1/4W		
R 83	CF,(ARD25T102J)	1kΩ,±5%,1/4W		
R 84	CF,(ARD25T101J)	100Ω,±5%,1/4W		
R 85	CF,(ARD25T222J)	2.2kΩ,±5%,1/4W		
R 86	CF,(ARD25T101J)	100Ω,±5%,1/4W		
R 87	CF,(ARD25T103J)	10kΩ,±5%,1/4W		
R 88	CF,(ARD25T331J)	330Ω,±5%,1/4W		
R 89	CF,(ARD25T332J)	3.3kΩ,±5%,1/4W		
R 90	CF,(ARD25T332J)	3.3kΩ,±5%,1/4W		

( ): Manufacturer's part number

* : Selected at factory

34W81257 13/18

COMPONENT LIST OF LOCAL

CKT REF	DESCRIPTION	RATING		NOTE
R 91	CF,(ARD25T331J)	330Ω,±5%,1/4W		
R 92	Var,MF,(RJ-6P 5kΩ)	5kΩ,1/2W		*
R 93	CF,(ARD25T332J)	3.3kΩ,±5%,1/4W		
R 94	CF,(ARD25T680J)	68Ω,±5%,1/4W		
R 95	CF,(ARD25T470J)	47Ω,±5%,1/4W		
R 96	CF,(ARD25T222J)	2.2kΩ,±5%,1/4W		
R 97	CF,(ARD25T332J)	3.3kΩ,±5%,1/4W		
R 98	CF,(ARD25T822J)	8.2kΩ,±5%,1/4W		
R 99	CF,(ARD25T680J)	68Ω,±5%,1/4W		
R 100	CF,(ARD25T680J)	68Ω,±5%,1/4W		
R 101	CF,(ARD25T820J)	82Ω,±5%,1/4W		
R 102	CF,(ARD25T561J)	560Ω,±5%,1/4W		
R 103	CF,(ARD25T221J)	220Ω,±5%,1/4W		
R 104	CF,(ARD25T680J)	68Ω,±5%,1/4W		
R 105	CF,(ARD25T681J)	680Ω,±5%,1/4W		
R 106	Not assigned			
R 107	CF,(ARD25T222J)	2.2kΩ,±5%,1/4W		
R 108	CF,(ARD25T332J)	3.3kΩ,±5%,1/4W		
R 109	CF,(ARD25T822J)	8.2kΩ,±5%,1/4W		
R 110	CF,(ARD25T680J)	68Ω,±5%,1/4W		
R 111	CF,(ARD25T680J)	68Ω,±5%,1/4W		
R 112	CF,(ARD25T820J)	82Ω,±5%,1/4W		
R 113	CF,(ARD25T561J)	560Ω,±5%,1/4W		
R 114	CF,(ARD25T680J)	68Ω,±5%,1/4W		
R 115	CF,(ARD25T681J)	680Ω,±5%,1/4W		
R 116	CF,(ARD25T221J)	220Ω,±5%,1/4W		
R 117	Var,MF,(RJ-6P 5kΩ)	5kΩ,1/2W		*
R 118	CF,(ARD25T561J)	560Ω,±5%,1/4W		
R 119	CF,(ARD25T271J)	270Ω,±5%,1/4W		
R 120	CF,(ARD25T182J)	1.8kΩ,±5%,1/4W		
R 121	CF,(ARD25T392J)	3.9kΩ,±5%,1/4W		
R 122	CF,(ARD25T151J)	150Ω,±5%,1/4W		
R 123	CF,(ARD25T471J)	470Ω,±5%,1/4W		
R 124	CF,(ARD25T472J)	4.7kΩ,±5%,1/4W		
R 125	CF,(ARD25T332J)	3.3kΩ,±5%,1/4W		
R 126	CF,(ARD25T681J)	680Ω,±5%,1/4W		
R 127	Single in-line array, (IHR-8-471JA)	470Ω,1/8W		
R 128	CF,(ARD25T471J)	470Ω,±5%,1/4W		
R 129	CF,(ARD25T471J)	470Ω,±5%,1/4W		
R 130	CF,(ARD25T471J)	470Ω,±5%,1/4W		
R 131	CF,(ARD25T332J)	3.3kΩ,±5%,1/4W		
R 132	CF,(ARD25T391J)	390Ω,±5%,1/4W		
R 133	Var,MF,(RJ-6P 5kΩ)	5kΩ,1/2W		*
R 134	CF,(ARD25T102J)	1kΩ,±5%,1/4W		
R 135	CF,(ARD25T181J)	180Ω,±5%,1/4W		

( ): Manufacturer's part number

* : Selected at factory

34W81257 14/18

COMPONENT LIST OF LOCAL

CKT REF	DESCRIPTION	RATING		NOTE
R 136	CF,(ARD25T102J)	1kΩ,±5%,1/4W		
R 137	CF,(ARD25T332J)	3.3kΩ,±5%,1/4W		
R 138	CF,(ARD25T222J)	2.2kΩ,±5%,1/4W		
R 139	CF,(ARD25T472J)	4.7kΩ,±5%,1/4W		
R 140	CF,(ARD25T102J)	1kΩ,±5%,1/4W		
R 141	CF,(ARD25T103J)	10kΩ,±5%,1/4W		
R 142	CF,(ARD25T472J)	4.7kΩ,±5%,1/4W		
R 143	CF,(ARD25T561J)	560Ω,±5%,1/4W		
R 144	Not assigned			
R 145	CF,(ARD25T182J)	1.8kΩ,±5%,1/4W		
R 146	CF,(ARD25T472J)	4.7kΩ,±5%,1/4W		
R 147	Var,MF,(RJ-6P 2kΩ)	2kΩ,1/2W		*
R 148	Not assigned			
R 149	CF,(ARD25T331J)	330Ω,±5%,1/4W		
R 150	CF,(ARD25T332J)	3.3kΩ,±5%,1/4W		
R 151	CF,(ARD25T332J)	3.3kΩ,±5%,1/4W		
R 152	CF,(ARD25T331J)	330Ω,±5%,1/4W		
R 153	Var,MF,(RJ-6P 5kΩ)	5kΩ,1/2W		*
R 154	CF,(ARD25T680J)	68Ω,±5%,1/4W		
R 155	CF,(ARD25T470J)	47Ω,±5%,1/4W		
R 156	CF,(ARD25T222J)	2.2kΩ,±5%,1/4W		
R 157	CF,(ARD25T332J)	3.3kΩ,±5%,1/4W		
R 158	CF,(ARD25T822J)	8.2kΩ,±5%,1/4W		
R 159	CF,(ARD25T680J)	68Ω,±5%,1/4W		
R 160	CF,(ARD25T680J)	68Ω,±5%,1/4W		
R 161	CF,(ARD25T820J)	82Ω,±5%,1/4W		
R 162	CF,(ARD25T561J)	560Ω,±5%,1/4W		
R 163	CF,(ARD25T221J)	220Ω,±5%,1/4W		
R 164	CF,(ARD25T680J)	68Ω,±5%,1/4W		
R 165	CF,(ARD25T681J)	680Ω,±5%,1/4W		
R 166	CF,(ARD25T271J)	270Ω,±5%,1/4W		
R 167	CF,(ARD25T222J)	2.2kΩ,±5%,1/4W		
R 168	CF,(ARD25T332J)	3.3kΩ,±5%,1/4W		
R 169	CF,(ARD25T822J)	8.2kΩ,±5%,1/4W		
R 170	CF,(ARD25T680J)	68Ω,±5%,1/4W		
R 171	CF,(ARD25T680J)	68Ω,±5%,1/4W		
R 172	CF,(ARD25T820J)	82Ω,±5%,1/4W		
R 173	CF,(ARD25T561J)	560Ω,±5%,1/4W		
R 174	CF,(ARD25T221J)	220Ω,±5%,1/4W		
R 175	CF,(ARD25T680J)	68Ω,±5%,1/4W		
R 176	CF,(ARD25T681J)	680Ω,±5%,1/4W		
R 177	Var,MF,(RJ-6P 5kΩ)	5kΩ,1/2W		*
R 178	CF,(ARD25T561J)	560Ω,±5%,1/4W		
R 179	CF,(ARD25T271J)	270Ω,±5%,1/4W		
R 180	CF,(ARD25T182J)	1.8kΩ,±5%,1/4W		

( ): Manufacturer's part number

* : Selected at factory

34W81257 15/18

COMPONENT LIST OF LOCAL

CKT REF	DESCRIPTION	RATING		NOTE
R 181	CF,(ARD25T392J)	3.9kΩ,±5%,1/4W		
R 182	CF,(ARD25T151J)	150Ω,±5%,1/4W		
R 183	CF,(ARD25T471J)	470Ω,±5%,1/4W		
R 184	CF,(ARD25T472J)	4.7kΩ,±5%,1/4W		
R 185	CF,(ARD25T332J)	3.3kΩ,±5%,1/4W		
R 186	CF,(ARD25T681J)	680Ω,±5%,1/4W		
R 187	Single in-line array, (IHR-8-471JA)	470Ω,1/8W		
R 188	CF,(ARD25T821J)	820Ω,±5%,1/4W		
R 189	Not assigned			
R 190	Not assigned			
R 191	CF,(ARD25T152J)	1.5kΩ,±5%,1/4W		
R 192	CF,(ARD25T152J)	1.5kΩ,±5%,1/4W		
R 193	CF,(ARD25T222J)	2.2kΩ,±5%,1/4W		
R 194	CF,(ARD25T560J)	56Ω,±5%,1/4W		
R 195	CF,(ARD25T472J)	4.7kΩ,±5%,1/4W		
R 196	CF,(ARD25T561J)	560Ω,±5%,1/4W		
R 197	Not assigned			
R 198	Var,MF,(RJ-6P 5kΩ)	5kΩ,1/2W		*
R 199	Var,MF,(RJ-6P 1kΩ)	1kΩ,1/2W		*
R 200	CF,(ARD25T560J)	56Ω,±5%,1/4W		
R 201	CF,(ARD25T152J)	1.5kΩ,±5%,1/4W		
R 202	CF,(ARD25T332J)	3.3kΩ,±5%,1/4W		
R 203	CF,(ARD25T153J)	15kΩ,±5%,1/4W		
R 204	Not assigned			
R 205	Not assigned			
R 206	Not assigned			
R 207	Not assigned			
R 208	Not assigned			
R 209	Not assigned			
R 210	Not assigned			
R 211	CF,(ARD25T331J)	330Ω,±5%,1/4W		
R 212	CF,(ARD25T332J)	3.3kΩ,±5%,1/4W		
R 213	CF,(ARD25T332J)	3.3kΩ,±5%,1/4W		
R 214	CF,(ARD25T331J)	330Ω,±5%,1/4W		
R 215	Var,MF,(RJ-6P 5kΩ)	5kΩ,1/2W		*
R 216	CF,(ARD25T470J)	47Ω,±5%,1/4W		
R 217	CF,(ARD25T471J)	470Ω,±5%,1/4W		
R 218	CF,(ARD25T470J)	47Ω,±5%,1/4W		
R 219	CF,(ARD25T222J)	2.2kΩ,±5%,1/4W		
R 220	CF,(ARD25T682J)	6.8kΩ,±5%,1/4W		
R 221	CF,(ARD25T*J)	10kΩ to ∞ ,±5%,1/4W		Q'ty 0 or 1 * ∞
R 222	CF,(ARD25T221J)	220Ω,±5%,1/4W		
R 223	CF,(ARD25T151J)	150Ω,±5%,1/4W		
R 224	CF,(ARD25T470J)	47Ω,±5%,1/4W		
R 225	CF,(ARD25T220J)	22Ω,±5%,1/4W		

( ): Manufacturer's part number

* : Selected at factory

34W81257 16/18

COMPONENT LIST OF LOCAL

CKT REF	DESCRIPTION	RATING		NOTE
R 226	CF,(ARD25T222J)	2.2kΩ,±5%,1/4W		
R 227	CF,(ARD25T332J)	3.3kΩ,±5%,1/4W		
R 228	CF,(ARD25T822J)	8.2kΩ,±5%,1/4W		
R 229	CF,(ARD25T680J)	68Ω,±5%,1/4W		
R 230	CF,(ARD25T820J)	82Ω,±5%,1/4W		
R 231	CF,(ARD25T561J)	560Ω,±5%,1/4W		
R 232	CF,(ARD25T681J)	680Ω,±5%,1/4W		
R 233	CF,(ARD25T470J)	47Ω,±5%,1/4W		
R 234	CF,(ARD25T101J)	100Ω,±5%,1/4W		
R 235	CF,(ARD25T680J)	68Ω,±5%,1/4W		
R 236	CF,(ARD25T680J)	68Ω,±5%,1/4W		
R 237	CF,(ARD25T151J)	150Ω,±5%,1/4W		
R 238	CF,(ARD25T680J)	68Ω,±5%,1/4W		
R 239	Not assigned			
R 240	Not assigned			
R 241	Not assigned			
R 242	Not assigned			
R 243	CF,(ARD25T680J)	68Ω,±5%,1/4W		
R 244	CF,(ARD25T101J)	100Ω,±5%,1/4W		
R 245	CF,(ARD25T821J)	820Ω,±5%,1/4W		
R 246	CF,(ARD25T472J)	4.7kΩ,±5%,1/4W		
R 247	CF,(ARD25T472J)	4.7kΩ,±5%,1/4W		
R 248	CF,(ARD25T221J)	220Ω,±5%,1/4W		
R 249	CF,(ARD25T330J)	33Ω,±5%,1/4W		
R 250	Not assigned			
R 251	CF,(ARD25T680J)	68Ω,±5%,1/4W		
R 252	Not assigned			
R 253	Not assigned			
R 254	Not assigned			
R 255	CF,(ARD25T471J)	470Ω,±5%,1/4W		
R 256	CF,(ARD25T122J)	1.2kΩ,±5%,1/4W		
R 257	Not assigned			
R 258	Not assigned			
R 259	CF,(ARD25T151J)	150Ω,±5%,1/4W		
R 260	Not assigned			
R 261	Not assigned			
R 262	Var,MF,(RJ-6P 500Ω)	500Ω,1/2W		*
R 263	Var,MF,(RJ-6P 20kΩ)	20kΩ,1/2W		*
R 264	CF,(ARD25T273J)	27kΩ,±5%,1/4W		
R 265	CF,(ARD25T333J)	33kΩ,±5%,1/4W		
R 266	Var,MF,(RJ-6P 5kΩ)	5kΩ,1/2W		*
R 267	Not assigned			
R 268	CF,(ARD25T221J)	220Ω,±5%,1/4W		
R 269	CF,(ARD25T101J)	100Ω,±5%,1/4W		
R 270	CF,(ARD25T681J)	680Ω,±5%,1/4W		

( ): Manufacturer's part number

* : Selected at factory

34W81257	17/18

COMPONENT LIST OF LOCAL

CKT REF	DESCRIPTION	RATING		NOTE
R 271	CF,(ARD25T822J)	8.2kΩ,±5%,1/4W		
R 272	CF,(ARD25T470J)	47Ω,±5%,1/4W		
R 273	CF,(ARD25T682J)	6.8kΩ,±5%,1/4W		
R 274	CF,(ARD25T222J)	2.2kΩ,±5%,1/4W		
R 275	CF,(ARD25T470J)	47Ω,±5%,1/4W		
R 276	CF,(ARD25T150J)	15Ω,±5%,1/4W		
R 277	CF,(ARD25T*J)	100Ω to 1kΩ,±5%,1/4W		* 100
R 278	CF,(ARD25T221J)	220Ω,±5%,1/4W		
R 279	CF,(ARD25T151J)	150Ω,±5%,1/4W		
R 280	Not assigned			
R 281	CF,(ARD25T822J)	8.2kΩ,±5%,1/4W		
R 282	CF,(ARD25T332J)	3.3kΩ,±5%,1/4W		
R 283	CF,(ARD25T222J)	2.2kΩ,±5%,1/4W		
R 284	CF,(ARD25T*J)	15k to 27kΩ,±5%,1/4W		* 22k
R 285	CF,(ARD25T152J)	1.5kΩ,±5%,1/4W		
R 286	CF,(ARD25T682J)	6.8kΩ,±5%,1/4W		
R 287	CF,(ARD25T*J)	4.7k to 10kΩ,±5%,1/4W		* 4.7k
R 288	CF,(ARD25T472J)	4.7kΩ,±5%,1/4W		
R 289	Var,MF,(RJ-6P 5kΩ)	5kΩ,1/2W		*
R 290	Var,MF,(RJ-6P 10kΩ)	10kΩ,1/2W		*
R 291	CF,(ARD25T*J)	220k to 750kΩ,±5%,1/4W		* 330k
Z 1	M8 Mixer			
Z 2	M8 Mixer			

( ): Manufacturer's part number

* : Selected at factory

34W81257 18/18

COMPONENT LIST OF REFERENCE OSC

CKT REF	DESCRIPTION	RATING		NOTE
C 1	Cer,(CK924F1H104Z)	0.1μF,+80/-20%,50V		
C 2	Cer,(CK924F1H104Z)	0.1μF,+80/-20%,50V		
C 3	Cer,(CK924C1H102M)	1000pF,±20%,50V		
C 4	Cer,(CK924C1H102M)	1000pF,±20%,50V		
C 5	Cer,(CK924C1H102M)	1000pF,±20%,50V		
C 6	Cer,(CK924C1H102M)	1000pF,±20%,50V		
C 7	Cer,(CK924C1H102M)	1000pF,±20%,50V		
C 8	Cer,(CK924F1H104Z)	0.1μF,+80/-20%,50V		
C 9	Not assigned			
C 10	Not assigned			
C 11	Cer,(CK924C1H102M)	1000pF,±20%,50V		
C 12	Cer,(CK924C1H102M)	1000pF,±20%,50V		
C 13	Cer,(CK924C1H102M)	1000pF,±20%,50V		
C 14	Cer,(CK924C1H104Z)	0.1μF,+80/-20%,50V		
C 15	Cer,(CK924F1H104Z)	0.1μF,+80/-20%,50V		
C 16	Cer,(CK924C1H104Z)	0.1μF,+80/-20%,50V		
C 17	Not assigned			
C 18	Not assigned			
C 19	Not assigned			
C 20	Cer,(CK924F1H104Z)	0.1μF,+80/-20%,50V		
C 21	Cer,(CK924F1H104Z)	0.1μF,+80/-20%,50V		
C 22	Cer,(CC924CH1H101J)	100pF,±5%,50V		
C 23	Cer,(CC924CH1H101J)	100pF,±5%,50V		
C 24	Cer,(CC924CH1H101J)	100pF,±5%,50V		
C 25	Cer,(CC924CH1H101J)	100pF,±5%,50V		
C 26	Cer,(CC924CH1H101J)	100pF,±5%,50V		
C 27	Cer,(CK924F1H104Z)	0.1μF,+80/-20%,50V		
C 28	Tant,(CS02H1V2R2M)	2.2μF,±20%,35V		
C 29	Tant,(CS02H1V2R2M)	2.2μF,±20%,35V		
C 30	Not assigned			
C 31	Not assigned			
C 32	Not assigned			
C 33	Cer,(CK924F1H104Z)	0.1μF,+80/-20%,50V		
C 34	Cer,(CK924F1H104Z)	0.1μF,+80/-20%,50V		
C 35	Cer,(CK924F1H104Z)	0.1μF,+80/-20%,50V		
C 36	Cer,(CK924F1H104Z)	0.1μF,+80/-20%,50V		
C 37	Elect,(CE04W1V22)	22μF,±20%,35V		
J 1	Connector,(U-SA0503)	5 pins		
J 2	Plug,(HNC2-2.5P-5DSL)			

( ): Manufacturer's part number

* : Selected at factory

34W81258	1/4

COMPONENT LIST OF REFERENCE OSC

CKT REF	DESCRIPTION	RATING		NOTE
L 1	Microinductor, (LF8-101K)	100μH		
L 2	Microinductor, (LF8-101K)	100μH		
L 3	Microinductor, (LF8-101K)	100μH		
Q 1	Tr,Si,NPN,(2SC2369)			
Q 2	Tr,Si,NPN,(2SC2369)			
Q 3	Tr,Si,NPN,(2SC2369)			
Q 4	Tr,Si,NPN,(2SC2369)			
Q 5	Not assigned			
Q 6	IC,(74LS02)			
Q 7	IC,(74LS02)			
Q 8	Di,Si,(1SS97)			
Q 9	Di,Si,(1SS97)			
Q 10	Di,Si,(1SS97)			
Q 11	Di,Si,(1SS97)			
Q 12	IC,(μPC157C)			
Q 13	Di,breakdown,(RD11EB)	10.4 to 11.6V,400mW		
Q 14	Di,Si,(1S953)			
Q 15	Di,Si,(1S953)			
Q 16	Di,breakdown,(RD5.1EB)	4.8 to 5.7V, 400mW		
Q 17	Di,breakdown,(RD5.1EB)	4.8 to 5.7V, 400mW		
R 1	CF,(ARD25T680J)	68Ω,±5%,1/4W		
R 2	CF,(ARD25T101J)	100Ω,±5%,1/4W		
R 3	CF,(ARD25T682J)	6.8kΩ,±5%,1/4W		
R 4	CF,(ARD25T222J)	2.2kΩ,±5%,1/4W		
R 5	CF,(ARD25T680J)	68Ω,±5%,1/4W		
R 6	CF,(ARD25T271J)	270Ω,±5%,1/4W		
R 7	CF,(ARD25T470J)	47Ω,±5%,1/4W		
R 8	CF,(ARD25T6R8J)	6.8Ω,±5%,1/4W		
R 9	CF,(ARD25T151J)	150Ω,±5%,1/4W		
R 10	CF,(ARD25T101J)	100Ω,±5%,1/4W		
R 11	CF,(ARD25T123J)	12kΩ,±5%,1/4W		
R 12	CF,(ARD25T101J)	100Ω,±5%,1/4W		
R 13	CF,(ARD25T222J)	2.2kΩ,±5%,1/4W		
R 14	CF,(ARD25T332J)	3.3 kΩ,±5%,1/4W		
R 15	CF,(ARD25T680J)	68Ω,±5%,1/4W		
R 16	CF,(ARD25T680J)	68Ω,±5%,1/4W		
R 17	CF,(ARD25T822J)	8.2kΩ,±5%,1/4W		
R 18	CF,(ARD25T331J)	330Ω,±5%,1/4W		
R 19	CF,(ARD25T102J)	1kΩ,±5%,1/4W		
R 20	CF,(ARD25T680J)	68Ω,±5%,1/4W		

( ): Manufacturer's part number

* : Selected at factory

34W81258	2/4

COMPONENT LIST OF REFERENCE OSC

CKT REF	DESCRIPTION	RATING		NOTE
R 21	CF,(ARD25T331J)	330Ω,±5%,1/4W		
R 22	CF,(ARD25T102J)	1kΩ,±5%,1/4W		
R 23	CF,(ARD25T*J)	100Ωto330Ω,±5%,1/4W		*,150
R 24	Not assigned			
R 25	Not assigned			
R 26	Not assigned			
R 27	CF,(ARD25T102J)	1kΩ,±5%,1/4W		
R 28	CF,(ARD25T392J)	3.9kΩ,±5%,1/4W		
R 29	CF,(ARD25T682J)	6.8kΩ,±5%,1/4W		
R 30	CF,(ARD25T271J)	270Ω,±5%,1/4W		
R 31	CF,(ARD25T222J)	2.2kΩ,±5%,1/4W		
R 32	Not assigned			
R 33	Not assigned			
R 34	CF,(ARD25T102J)	1kΩ,±5%,1/4W		
R 35	CF,(ARD25T102J)	1kΩ,±5%,1/4W		
R 36	CF,(ARD25T103J)	10kΩ,±5%,1/4W		
R 37	CF,(ARD25T103J)	10kΩ,±5%,1/4W		
R 38	Var,MF,(RJ-6S 1kΩ)	1kΩ,1/2W		
R 39	CF,(ARD25T102J)	1kΩ,±5%,1/4W		
R 40	CF,(ARD25T104J)	100kΩ,±5%,1/4W		
R 41	CF,(ARD25T821J)	820Ω,±5%,1/4W		
R 42	Not assigned			
R 43	Not assigned			
R 44	Not assigned			
R 45	Not assigned			
R 46	CF,(ARD25T473J)	47kΩ,±5%,1/4W		
R 47	Not assigned			
R 48	CF,(ARD25T822J)	8.2kΩ,±5%,1/4W		
R 49	CF,(ARD25T102J)	1kΩ,±5%,1/4W		
R 50	CF,(ARD25T104J)	100kΩ,±5%,1/4W		
R 51	MF,(RN14K2F4991D)	4.99kΩ,±0.5%,1/4W		
R 52	MF,(RN14K2F4991D)	4.99kΩ,±0.5%,1/4W		
R 53	Var,MF,(RJ-6S200Ω)	200Ω,1/2W		
R 54	CF,(ARD25T751J)	750Ω,±5%,1/4W		
R 55	CF,(ARD25T152J)	1.5kΩ,±5%,1/4W		
S 1	Toggle,(8E2011)			
T 1	Trans,(342T69294)			
T 2	Trans,(342T67152 D)			

( ): Manufacturer's part number

* : Selected at factory

34W81258 3/4

COMPONENT LIST OF REFERENCE OSC

CKT REF	DESCRIPTION	RATING		NOTE
Z 1	XTAL OSC,(34X73062)			

( ): Manufacturer's part number

* : Selected at factory

34W81258	4/4

COMPONENT LIST OF FRONT PANEL

CKT REF	DESCRIPTION	RATING		NOTE
C 1	Cer,(CK924F1H104Z)	0.1μF,+80/-20%,50V		
C 2	Cer,(CK924F1H104Z)	0.1μF,+80/-20%,50V		
C 3	Cer,(CK924F1H104Z)	0.1μF,+80/-20%,50V		
C 4	Cer,(CK924F1H104Z)	0.1μF,+80/-20%,50V		
C 5	Cer,(CK924F1H104Z)	0.1μF,+80/-20%,50V		
C 6	Cer,(CK924F1H104Z)	0.1μF,+80/-20%,50V		
C 7	Cer,(CK924F1H104Z)	0.1μF,+80/-20%,50V		
C 8	Cer,(CK924C1H102M)	1000pF,±20%,50V		
C 9	Cer,(CK924C1H103M)	0.01μF,±20%,50V		
C 10	Cer,(CK924C1H102M)	1000pF,±20%,50V		
C 11	Tant,(CS02H1VR22M)	0.22μF,±20%,35V		
C 12	Tant,(CS02H1VR22M)	0.22μF,±20%,35V		
C 13	Cer,(CK924F1H104Z)	0.1μF,+80/-20%,50V		
C 14	Cer,(CK924C1H103M)	0.01μF,±20%,50V		
C 15	Cer,(CK924C1H102M)	1000pF,±20%,50V		
C 16	Tant,(CS02H1V010M)	1μF,±20%,35V		
C 17	Tant,(CS02H1V010M)	1μF,±20%,35V		
C 18	Tant,(CS02H1V010M)	1μF,±20%,35V		
C 19	Cer,(CK924C1H103M)	0.01μF,±20%,50V		
C 20	Cer,(CK924F1H104Z)	0.1μF,+80/-20%,50V		
J 1	Connector, (H1F23A-26D-AA-30S)	26pins,30cm		
Q 1	IC,(TC40H004P)			
Q 2	IC,(TC40H002P)			
Q 3	IC,(TC40H002P)			
Q 4	IC,(TC40H374P)			
Q 5	IC,(μPA57C)			
Q 6	IC,(μPA57C)			
Q 7	IC,(TC40H002P)			
Q 8	IC,(TC40H042P)			
Q 9	IC,(μPA56C)			
Q 10	IC,(μPA56C)			
Q 11	IC,(DM81LS97(AN)			
Q 12	IC,(TC40H004P)			
Q 13	IC,(TC40H374P)			
Q 14	IC,(TC40H374P)			
Q 15	IC,(TC40H374P)			

( ): Manufacturer's part number

* : Selected at factory

34W81260 1/3

COMPONENT LIST OF FRONT PANEL

CKT REF	DESCRIPTION	RATING		NOTE
Q 16	IC,(TC40H374P)			
Q 17	IC,(μPA56C)			
Q 18	IC,(TC40H374P)			
Q 19	IC,(TC40H074P)			
Q 20	IC,(TC40H000P)			
Q 21	IC,(μPA56C)			
Q 22	IC,(MM74C923)			
Q 23	IC,(74LS123)			
Q 24	IC,(TC40H004P)			
Q 25	IC,(MM74C923)			
Q 26	IC,(TC40H000P)			
Q 27	IC,(TC40H074P)			
Q 28	IC,(TC40H010P)			
Q 29	IC,(MM74C923)			
Q 30	IC,(MM74C14)			
Q 31 to Q 43	LED,(LN514GK)			
Q 44	LED,(TLG226)			
Q 45	LED,(TLG226)			
Q 46	LED,(TLG226)			
Q 47	LED,(TLG226)			
Q 48	LED,(TLG226)			
Q 49	LED,(TLG226)			
Q 50	LED,(TLG226)			
Q 51	LED,(TLG226)			
Q 52	LED,(TLG226)			
Q 53	LED,(TLR226)			
Q 54	LED,(TLR226)			
Q 55	LED,(TLG226)			
Q 56	LED,(TLG226)			
Q 57	LED,(TLG226)			
Q 58	LED,(TLG226)			
Q 59	LED,(TLG226)			
Q 60	LED,(TLG226)			
Q 61	LED,(TLG226)			
Q 62	Not assigned			
Q 63	LED,(TLG226)			
Q 64	LED,(TLG226)			
Q 65	Not,assigned			
Q 66	Not,assigned			
Q 67	Not,assigned			
Q 68 to Q 78	LED,(TLG226)			
Q 79	Tr,photo,(PT350)			
Q 80	Tr,photo,(PT350)			

( ): Manufacturer's part number

* : Selected at factory

34W81260	2/3

COMPONENT LIST OF FRONT PANEL

CKT REF	DESCRIPTION	RATING		NOTE
Q 81	LED,(TLG226)			
Q 82	LED,(TLG226)			
Q 83	LED,(TLG226)			
Q 84	LED,(TLG226)			
R 1	DIL type,(DIL8C 100ΩJ)	100Ω,±5%,1/4W		
R 2	DIL type,(DIL8C 100ΩJ)	100Ω,±5%,1/4W		
R 3	DIL type,(DIL8C 100ΩJ)	100Ω,±5%,1/4W		
R 4	CF,(ARD25T331J)	330Ω,±5%,1/4W		
R 5	Not assigned			
R 6	CF,(ARD25T331J)	330Ω,±5%,1/4W		
R 7	CF,(ARD25T470J)	47Ω,±5%,1/4W		
R 8	CF,(ARD25T183J)	18kΩ,±5%,1/4W		
R 9	CF,(ARD25T183J)	18kΩ,±5%,1/4W		
R 10	DIL type,(DIL8C 100ΩJ)	100Ω,±5%,1/4W		
R 11	CF,(ARD25T103J)	10kΩ,±5%,1/4W		
R 12	CF,(ARD25T331J)	330Ω,±5%,1/4W		
R 13	CF,(ARD25T103J)	10kΩ,±5%,1/4W		
R 14	Single in-line array, (IHR-5-104JA)	100kΩ×5		
R 15	Single in-line array, (IHR-5-104JA)	100kΩ×5		
R 16	Single in-line array, (IHR-5-104JA)	100kΩ×5		
R 17	Var,MF,(RJ-6P 100Ω)	100Ω,1/2W		
S 1 to S 48	Key,(MM9-1)			
Z 1	Rotary encoder, (MRE40)			(349H74238)

( ): Manufacturer's part number

* : Selected at factory

34W81260	3/3

COMPONENT LIST OF CPU

CKT REF	DESCRIPTION	RATING		NOTE
C 1 to C 15	Cer,(CK924F1H104Z)	0.1μF,+80/-20%,50V		
C 16	Not assigned			
C 17	Cer,(CC924CH1H330J)	33pF,±5%,50V		
C 18	Cer,(CC924CH1H100D)	10pF,±0.5pF,50V		
C 19	Cer,(CK924C1H104M)	0.1μF,±20%,50V		
C 20 to C 32	Cer,(CK924F1H104Z)	0.1μF,+80/-20%,50V		
C 33	Not assigned			
C 34	Cer,(CK924F1H104Z)	0.1μF,+80/-20%,50V		
C 35	Cer,(CK924F1H104Z)	0.1μF,+80/-20%,50V		
C 36	Cer,(CK924F1H104Z)	0.1μF,+80/-20%,50V		
C 37	Cer,(CK924C1H102M)	1000pF,±20%,50V		
C 38	Cer,(CK924C1H102M)	100pF,±20%,50V		
C 39	Cer,(CK924F1H104Z)	0.1μF,+80/-20%,50V		
C 40	Cer,(CK924F1H104Z)	0.1μF,+80/-20%,50V		
C 41	Cer,(CK924F1H104Z)	0.1μF,+80/-20%,50V		
C 42	Not assigned			
C 43	Not assigned			
C 44	Not assigned			
C 45	Not assigned			
C 46	Cer,(CC924CH1H330J)	33pF,±5%,50V		
C 47	Cer,(CK924F1H104Z)	0.1μF,+80/-20%,50V		
C 48	Cer,(CK924F1H104Z)	0.1μF,+80/-20%,50V		
C 49	Cer,(CK924F1H104Z)	0.1μF,+80/-20%,50V		
C 50	Cer,(CK924F1H104Z)	0.1μF,+80/-20%,50V		
C 51	Cer,(CK924F1H104Z)	0.1μF,+80/-10%,50V		
C 52	Cer,(CC924CH1H101J)	100pF,±5%,50V		
C 53	Not assigned			
C 54	Cer,(CK924F1H104Z)	0.1μF,+80/-10%,50V		OPTION
C 55	Cer,(CK924F1H104Z)	0.1μF,+80/-10%,50V		OPTION
J 1	Connector, (HIF3-34P-2.54DS)			
Q 1	IC,(LM317T)			
Q 2	IC,(TC40H374P)			
Q 3	IC,(TC40H374P)			
Q 4	IC,(TC40H157P)			
Q 5	IC,(TC40H157P)			

( ): Manufacturer's part number

* : Selected at factory

34W81261 1/4

COMPONENT LIST OF CPU

CKT REF	DESCRIPTION	RATING		NOTE
Q 6	IC,(TC40H157P)			
Q 7	IC,(TC40H157P)			
Q 8	Di,Si,(1S953)			
Q 9	Tr,Si,NPN,(2SC943)			
Q 10	IC,(TC40H002P)			
Q 11	IC,(TC40H042P)			
Q 12	IC,(TC40H042P)			
Q 13	IC,(TC40H032P)			
Q 14	IC,(TC40H042P)			
Q 15	Di,Si,(1S953)			
Q 16	IC,(μPD444C)	1K×4,RAM		
Q 17	IC,(μPD444C)	1K×4,RAM		
Q 18	IC,(MBM2732A-25)	4K×8,ROM		
Q 19	IC,(MBM2732A-25)	4K×8,ROM		
Q 20	IC,(MBM2732A-25)	4K×8,ROM		
Q 21	IC,(HM6116P)	2K×8,RAM		
Q 22	IC,(MBM2732A-25)	4k×8,ROM		
Q 23	IC,(MBM2732A-25)	4K×8,ROM		
Q 24	IC,(74LS374)			
Q 25	IC,(74LS245)			
Q 26	IC,(TC40H004P)			
Q 27	IC,(DM81LS98(AN))			
Q 28	Not assigned			
Q 29	IC,(μPD8253C-2)			
Q 30	IC,(μPD8085AHC)			
Q 31	Di,Si,(1S953)			
Q 32	Tr,Si,NPN,(2SC1280A Ⓢ)			
Q 33	IC,(TC40H074P)			
Q 34	Not assigned			
Q 35	IC,(TC40H374P)			
Q 36	IC,(74LS74)			
Q 37	IC,(74LS00)			
Q 38	IC,(74LS04)			
Q 39	IC,(HCPL2630)			
Q 40	IC,(TC40H042P)			
Q 41	IC,(74LS165)			
Q 42	IC,(74LS195A)			
Q 43	IC,(74LS20)			

( ): Manufacturer's part number

* : Selected at factory

34W81261	2/4

COMPONENT LIST OF CPU

CKT REF	DESCRIPTION	RATING		NOTE
Q 44	IC,(74LS00)			
Q 45	IC,(74LS38)			
Q 46	IC,(HCPL2630)			
Q 47	IC,(74LS164)			
Q 48	IC,(DM81LS97(AN))			
Q 49	IC,(74LS195 A)			
Q 50	IC,(74LS195 A)			
Q 51	IC,(74LS00)			
Q 52	IC,(74LS279)			
Q 53	IC,(74LS00)			
Q 54	IC,(HCPL2630)			
Q 55	IC,(74LS32)			
Q 56	IC,(DM81LS98(AN))			
Q 57	IC,(MC3441AP)			
Q 58	IC,(MC3441AP)			
Q 59	IC,(74LS273)			
Q 60	IC,(74L14)			
Q 61	IC,(74LS139)			
Q 62	IC,(HCPL2630)			
Q 63	IC,(74LS05)			
Q 64	IC,(74LS00)			
Q 65	IC,(7438)			
Q 66	IC,(74LS14)			
Q 67	IC,(TC40H074P)			
Q 68	IC,(HCPL2630)			
Q 69	IC,(74LS138)			OPT35
Q 70	IC,(74LS641-1)			OPT35
Q 71	IC,(TC40H042P)			OPTION
Q 72	IC,(HM6264P-15)			OPTION
Q 73	IC,(HM6264P-15)			OPTION
R 1	MF,(RN14K2E2430D)	243Ω,±0.5%,1/4W		
R 2	MF,(RN14K2E8660D)	866Ω,±0.5%,1/4W		
R 3	CF,(ARD25T822J)	8.2kΩ,±5%,1/4W		
R 4	CF,(ARD25T152J)	1.5kΩ,±5%,1/4W		
R 5	CF,(ARD25T332J)	3.3kΩ,±5%,1/4W		
R 6	CF,(ARD25T332J)	3.3kΩ,±5%,1/4W		
R 7	Single in-line array, (IHR-8-682JA)	6.8kΩ×8,1/2W		
R 8	CF,(ARD25T682J)	6.8kΩ,±5%,1/4W		
R 9	Single in-line array, (IHR-8-682JA)	6.8kΩ×8,1/2W		
R 10	CF,(ARD25T104J)	100kΩ,±5%,1/4W		

( ): Manufacturer's part number

* : Selected at factory

34W81261	3/4

COMPONENT LIST OF CPU

CKT REF	DESCRIPTION	RATING		NOTE
R 11	CF,(ARD25T224J)	220kΩ,±5%,1/4W		
R 12	Not assigned			
R 13	CF,(ARD25T103J)	10kΩ,±5%,1/4W		
R 14	CF,(ARD25T332J)	3.3kΩ,±5%,1/4W		
R 15	CF,(ARD25T332J)	3.3kΩ,±5%,1/4W		
R 16	CF,(ARD25T331J)	330Ω,±5%,1/4W		
R 17	CF,(ARD25T331J)	330Ω,±5%,1/4W		
R 18	CF,(ARD25T332J)	3.3kΩ,±5%,1/4W		
R 19	CF,(ARD25T332J)	3.3kΩ,±5%,1/4W		
R 20	CF,(ARD25T331J)	330Ω,±5%,1/4W		
R 21	CF,(ARD25T331J)	330Ω,±5%,1/4W		
R 22	CF,(ARD25T332J)	3.3kΩ,±5%,1/4W		
R 23	CF,(ARD25T332J)	3.3kΩ,±5%,1/4W		
R 24	CF,(ARD25T331J)	330Ω,±5%,1/4W		
R 25	CF,(ARD25T331J)	330Ω,±5%,1/4W		
R 26	CF,(ARD25T332J)	3.3kΩ,±5%,1/4W		
R 27	CF,(ARD25T332J)	3.3kΩ,±5%,1/4W		
R 28	CF,(ARD25T331J)	330Ω,±5%,1/4W		
R 29	CF,(ARD25T331J)	330Ω,±5%,1/4W		
R 30	Single in-line array, (IHR-8-682JA)	6.8kΩ×8,1/8W		
R 31	Single in-line array, (IHR-8-332JA)	3.3kΩ×8,1/8W		
R 32	Single in-line array, (IHR-8-682JA)	6.8kΩ×8,1/8W		
R 33	CF,(ARD25T331J)	330Ω,±5%,1/4W		
R 34	CF,(ARD25T331J)	330Ω,±5%,1/4W		
R 35	CF,(ARD25T332J)	3.3kΩ,±5%,1/4W		
R 36	Single in-line array, (IHR-4-103JA)	10kΩ×4,1/8W		OPT35
S 1	Switch,(DYS-4)			OPT35
X 1	XTAL OSC,(HC-18/U 4MHz)	4MHz		
Z 1	Battery,(GB50-3F(A))	3.6V,50mAH		

( ): Manufacturer's part number

* : Selected at factory

34W81261	4/4

COMPONENT LIST OF POWER SUPPLY

CKT REF	DESCRIPTION	RATING		NOTE
C 1	Elect,(SM25T10000)	10000μF,±20%,25V		
C 2	Elect,(CE02W1J332)	3300μF,±20%,63V		
C 3	Elect,(CE02W1J332)	3300μF,±20%,63V		
C 4	Elect,(CE02W1J102)	1000μF,±20%,63V		
C 5	Elect,(CE04W1V100)	10μF,±20%,35V		
C 6	Elect,(CE04W1V100)	10μF,±20%,35V		
C 7	Elect,(CE04W1V100)	10μF,±20%,35V		
C 8	Elect,(CE04W1V100)	10μF,±20%,35V		
C 9	Elect,(CE04W1V100)	10μF,±20%,35V		
C 10	Elect,(CE04W1V100)	10μF,±20%,35V		
C 11	Elect,(CE04W1V100)	10μF,±20%,35V		
C 12	Elect,(CE04W1V100)	10μF,±20%,35V		
C 13	Elect,(CE04W1V100)	10μF,±20%,35V		
C 14	Elect,(CE04W1V100)	10μF,±20%,35V		
C 15	Elect,(CE04W1V220)	22μF,±20%,35V		
C 16	Elect,(CE04W1V220)	22μF,±20%,35V		
C 17	Elect,(CE04W1V220)	22μF,±20%,35V		
C 18	Elect,(CE04W1V220)	22μF,±20%,35V		
C 19	Elect,(CE04W1V220)	22μF,±20%,35V		
C 20	Elect,(CE04W1V220)	22μF,±20%,35V		
C 21	Elect,(CE04W1V220)	22μF,±20%,35V		
C 22	Elect,(CE04W1V220)	22μF,±20%,35V		
C 23	Elect,(CE04W1V220)	22μF,±20%,35V		
C 24	Elect,(CE04W1V220)	22μF,±20%,35V		
C 25	Elect,(CE02W1E102)	1000μF,±20%,25V		
C 26	Elect,(CE04W1V220)	22μF,±20%,35V		
C 27	Elect,(CE04W1V220)	22μF,±20%,35V		
C 28	Elect,(CE04W1V220)	22μF,±20%,35V		
J 1	Connector,(U-PB1521)	15 pins		
J 2	Not assigned			
J 3	Connector,(U-PA0519)	5 pins		
J 4	Multi connector, (HIF2,3-26D-(AA)(30))			
J 5	Connector,(U-PA0521)	5 pins		
J 6	Connector,(U-PA0521)	5 pins		
J 7	Connector,(U-PA0521)	5 pins		
M 1	Timer,(TM-O)			

( ): Manufacturer's part number

* : Selected at factory

34W81263 1/3

COMPONENT LIST OF POWER SUPPLY

CKT REF	DESCRIPTION	RATING		NOTE
Q 1	Rectifier,Si, (M4C-52-12)			
Q 2	Rectifier,Si, (RB-152-LFB)			
Q 3	Rectifier,Si, (RB-152-LFB)			
Q 4	Rectifier,Si, (RB-152-LFB)			
Q 5	IC,(LM317T)			
Q 6	IC,(LM317T)			
Q 7	IC,(LM317T)			
Q 8	IC,(LM317T)			
Q 9	IC,(LM317T)			
Q 10	IC,(LM337T)			
Q 11	IC,(LM337T)			
Q 12	IC,(LM337T)			
Q 13	IC,(LM337T)			
Q 14	IC,(LM317T)			
Q 15	Rectifier,Si, (RB-152-LFB)			
Q 16	IC,(μPC14315H)			
Q 17	IC,(μPC14305H)			
Q 18	IC,(μPC14305H)			
R 1	MF,(RN14K6490D)	649Ω,±0.5%		
R 2	MF,(RN14K2100D)	210Ω,±0.5%		
R 3	MF,(RN14K6490D)	649Ω,±0.5%		
R 4	MF,(RN14K2100D)	210Ω,±0.5%		
R 5	MF,(RN14K1741D)	1.74kΩ,±0.5%		
R 6	MF,(RN14K2000D)	200Ω,±0.5%		
R 7	MF,(RN14K1741D)	1.74kΩ,±0.5%		
R 8	MF,(RN14K2000D)	200Ω,±0.5%		
R 9	MF,(RN14K1741D)	1.74kΩ,±0.5%		
R 10	MF,(RN14K2000D)	200Ω,±0.5%		
R 11	MF,(RN14K2671D)	2.67kΩ,±0.5%		
R 12	MF,(RN14K2000D)	200Ω,±0.5%		
R 13	MF,(RN14K2671D)	2.67kΩ,±0.5%		
R 14	MF,(RN14K2000D)	200Ω,±0.5%		
R 15	MF,(RN14K2671D)	2.67kΩ,±0.5%		
R 16	MF,(RN14K2000D)	200Ω,±0.5%		
R 17	MF,(RN14K2671D)	2.67kΩ,±0.5%		
R 18	MF,(RN14K2000D)	200Ω,±0.5%		
R 19	MF,(RN14K2211D)	2.21kΩ,±0.5%		
R 20	MF,(RN14K2000D)	200Ω,±0.5%		

( ): Manufacturer's part number

* : Selected at factory

34W81263 2/3

COMPONENT LIST OF POWER SUPPLY

CKT REF	DESCRIPTION	RATING		NOTE
R 21	MF, (RN14K9091D)	9.09kΩ, ±0.5%		
R 22	Not assigned			
R 23	CF, (ARD25T103J)	10kΩ, ±5%, 1/4W		
R 24	CF, (ARD25T102J)	1kΩ, ±5%, 1/4W		
R 25	CF, (ARD25T105J)	1MΩ, ±5%, 1/4W		

( ): Manufacturer's part number

* : Selected at factory

34W81263	3/3

COMPONENT LIST OF MOTHER BOARD

CKT REF	DESCRIPTION	RATING		NOTE
J 1	Connector,(U-PA2219)	22 pins		
J 2	Connector, (225J-22821-587)	28 pins × 2		
J 3	Connector, (225J-22821-587)	28 pins × 2		
J 4	Connector, (HNC2-2.5P-3DSL)	3 pins		
J 5	Connector,(U-PA0519)	5 pins		
J 6	Connector,(U-PA2219)	22 pins		
J 7	Connector, (HIF-3-26P-2.54DSA)	26 pins		
J 8	Connector, (HIF-3-26P-2.54DSA)	26 pins		
J 9	Connector, (225J-22821-587)	28 pins × 2		
R 1	CF,(ARD25T103J)	10kΩ,±5%,1/4W		
S 1	Switch,(AS1D-2M)			

( ): Manufacturer's part number

* : Selected at factory

34W81264	1/1